DOCUMENT DATA FORM **Your Name: Nick Carino**

Document Title or Description (max. 254 characters): Circle: Same as cover (or fill in below)

Drawing Book 7, chapters 3 and 4: Floor panels and details

Include work order no. and floor no. if applicable

Roll # DB03	**Doc. ID (report #, dwg. #):**	
Document Date:	**Document Author Name:**	**Author Organization:** SHC&R

KEYWORDS – HIGHLIGHT ALL THAT APPLY

Level 1

Bankers Trust	Project 4	(WTC 1 - North Tower)	Add
Below Grade	Project 5	WTC 2 - South Tower	
Concourse	Project 6	WTC 3 - Marriot Hotel	
Electrical Substation	Project 7	WTC 4 - South Plaza Bldg.	
Liberty Plaza	Project 8	WTC 5 - North Plaza Bldg	
PATH Station	WFC 1 - Oppenhiemer Dow	WTC 6 - Customs House	
PATH Terminal	WFC 2 - Tower B	WTC 7	
Project 1	WFC 3 - American Express	WTC Complex	
Project 2	WFC 4 - Tower D	WTC Plaza	
Project 3			

Level 2

Accident analysis & risk	Fire protection	Misc. Performance Problems	(Structural)
Architectural	Fire service	News coverage	Tenant alterations
Data request	Landscaping	Police	Tenant Space
Emergency management	Management	Security	Add
Evacuation	Mech./elec.		

Level 3

1993 explosion	Cranes	Frame	Roof	Weight
A/E fitout	Criteria	Frame analysis	Safety	Weld detail
A-242	Dampers	Frequency	Schedule	Weld size
A-36	Debris	Fuel	Sculpture	Welding
A-497	Deck	Furniture layout	Security system	Wind
Aircraft impact	Deflection	Generators	Shear knuckle	Windows
Air cooled condensers	Demolition	Guidelines	Shear test	Yield strength
Analysis	Design	Gypsum board	Shear Stud	Add
Angles	(Detailing)	Hat truss	Shop drawings	(Drawing books)
Antenna	Doors	Human comfort	Shortening	
Artifacts	Drawings	HVAC	Slab	
Asbestos	Eastern States Steel	Index	Slurry wall	(Floor panel)
Base plate	Egress	Inspection	Smoke control	
Beams	Elevator	Insulation	Smoke test	
Bid documents	Elevator Shaft	Job number	Spandrel beam	
Bid Invitation	Emergency communications	Joist	Specifications	
Bow tie	Equipment	L-50	Splices	
Bracing	Erection marks	Lighting	Sprinkler	
Bridging truss	Errors & Omissions	Loads	Stability	
Building code	Escalator	Maintenance	Stairways	
Calculations	Expansion joint	Marking	Standards	
Carpet	Exterior columns	Mesh reinforcement	Steel	
Ceilings	Fabrication	Mill inspection	Steel composition	
Certification	Family member	Model	Stiffness	
Chillers	Field survey	Mullion	Structural review	
Cladding	Fire alarms	Operations	Surveillance	
Collapse	Fireproofing	Paint	Survey	
Columns	Fire spread	Partition layout	Survivor	
Communication systems	Fire testing	Partitions	Tenant list	
Composite truss	Firetower	Photos	Tenant occupancy	
Computer output	Flag Pole	Pipes	Testing	
Computer program	Flammability	Plumbing	Tie	
Concrete	Floor	Prestressing	Tolerances	
Connections	Floor load	Probability, uncertainty	Transfer Girders	
Construction	Floor slab	Quality control	Triad	
Contract	Floor system	Ramp	Truss	
Core beams	Floor trusses	Reinforcing (strengthening)	Vestibule	
Core columns	Formwork	Renovation	Vibration	
Corrosion	Foundations	Repair	Walls	
Cracking	Fracture	Research & Development	Water supply	
			Weather	

WTCI-1056-LERA

REVISIONS

1-3-68
2-15-68
4-1-68
1-3-69
1-6-69
2-3-69
3-3-69
4-1-69
Printed 5-1-69

SKILLING - HELLE - CHRISTIANSEN - ROBERTSON Structural & Civil Engineers

PROJECT THE WORLD TRADE CENTER | TITLE FLOOR PANELS-INDEX & GENERAL NOTES | DATE 10/20/67

7-AB3- 1 Floor Panel - Index & General Notes
7-AB3- 2 Floor Panel Dimension Schedule 1
7-AB3- 3 Floor Panel A1
7-AB3- 4 Floor Panel A1 G/E & A1 J/C
7-AB3- 5 Floor Panel B1
7-AB3- 6 Floor Panel BR1
7-AB3- 7 Floor Panel C1
7-AB3- 8 Floor Panel CR1
7-AB3- 9 Floor Panel D1
7-AB3-10 Floor Panel DR1
7-AB3-11 Floor Panel E1
7-AB3-12 Floor Panel ER1
7-AB3-13 Floor Panel F1
7-AB3-14 Floor Panel FR1
7-AB3-15 Floor Panel G1
7-AB3-16 Floor Panel GR1
7-AB3-17 Floor Panel H1
7-AB3-18 Floor Panel HR1 & HR6
7-AB3-19 Floor Panel J1
7-AB3-20 Floor Panel K1
7-AB3-21 Floor Panel KR1
7-AB3-22 Floor Panel M1
7-AB3-23 Floor Panel MR1
7-AB3-24 Floor Panel Dimension Schedule 2
7-AB3-25 Floor Panel A2
7-AB3-26 Floor Panel B2
7-AB3-27 Floor Panel BR2
7-AB3-28 Floor Panel C2
7-AB3-29 Floor Panel CR2
7-AB3-30 Floor Panel D2
7-AB3-31 Floor Panel DR2
7-AB3-32 Floor Panel E2
7-AB3-33 Floor Panel ER2
7-AB3-34 Floor Panel F2
7-AB3-35 Floor Panel FR2
7-AB3-36 Floor Panel G2
7-AB3-37 Floor Panel GR2
7-AB3-38 Floor Panel H2
7-AB3-39 Floor Panel HR2 & 7
7-AB3-40 Floor Panel J2
7-AB3-41 Floor Panel Dimension Schedule 3
7-AB3-42 Floor Panel A3
7-AB3-43 Floor Panel B3
7-AB3-44 Floor Panel BR3
7-AB3-45 Floor Panel C3
7-AB3-46 Floor Panel CR3
7-AB3-47 Floor Panel D3
7-AB3-48 Floor Panel DR3
7-AB3-49 Floor Panel E3
7-AB3-50 Floor Panel ER3
7-AB3-51 Floor Panel F3
7-AB3-52 Floor Panel FR3
7-AB3-53 Floor Panel A8
7-AB3-54 Floor Panel B8
7-AB3-55 Floor Panel BR8
7-AB3-56 Floor Panel C8
7-AB3-57 Floor Panel CR8
7-AB3-58 Floor Panel D8
7-AB3-59 Floor Panel DR8
7-AB3-60 Floor Panel E8
7-AB3-61 Floor Panel ER8
7-AB3-62 Floor Panel F8
7-AB3-63 Floor Panel FR8
7-AB3-70 Floor Panel Dimension Schedule 5
7-AB3-71 Floor Panel D5
7-AB3-72 Floor Panel DR5
7-AB3-73 Floor Panel E5
7-AB3-74 Floor Panel ER5
7-AB3-75 Floor Panel F5
7-AB3-76 Floor Panel FR5
7-AB3-77 Floor Panel C6
7-AB3-78 Floor Panel CR6
7-AB3-79 Floor Panel C7
7-AB3-80 Floor Panel CR7

GENERAL NOTES:

1. Material for steel deck supporting members L 3 x 2 to be Fy = 50 unless otherwise noted.

2. Deck beam angles and miscellaneous angles called for on floor panel drawings have long legs vertical.

3. Except as otherwise indicated, all L 3 x 2 deck supports shall be continuous.

4. Numbers shown on floor panel drawings thus ( ) are vertical interaction forces in Kips between each C32 truss and the 24T truss.

   Where no interaction force is given, the connection shall be proportioned for a minimum connection of 5 Kips. All connections shall be proportioned for a tensile as well as a compressive interaction force of the specified value.

5. Contractor shall supply representative calculations and/or test results for each connection proportioned by the Contractor. All connections, details and the like are subject to approval by the Engineer.

6. Connection of L 3 x 2 deck support beams to C32 trusses shall be proportioned for a minimum reaction of 6 Kips.

LICENSED PROFESSIONAL ENGINEER LESLIE E. ROBERTSON No. 34360 UNIVERSITY OF THE STATE OF NEW YORK

SKILLING - HELLE - CHRISTIANSEN - ROBERTSON — Structural & Civil Engineers

PROJECT: THE WORLD TRADE CENTER | TITLE: FLOOR PANEL - DIMENSION SCHEDULE† | DATE: 10-20-67

REVISIONS

1-3-68

PANEL NO.									OUT TO OUT PANEL DIM. L	BOLT HOLE DIMENSION M	DIMENSION A
A1A	B1A	BR1A	C1A	CR1A	D1A	DR1A	E1A	ER1A	59' - 9"	59' - 3¾"	5' - 2½"
A1B	B1B	BR1B	C1B	CR1B	D1B	DR1B	E1B	ER1B	59' - 8½"	59' - 3¼"	5' - 2"
A1C	B1C	BR1C	C1C	CR1C	D1C	DR1C	E1C	ER1C	59' - 8"	59' - 2¾"	5' - 1½"
A1D	B1D	BR1D	C1D	CR1D	D1D	DR1D	E1D	ER1D	59' - 5"	58' - 11¾"	4' - 10½"
A1E	B1E	BR1E	C1E	CR1E	D1E	DR1E	E1E	ER1E	59' - 3"	58' - 9¾"	4' - 8½"
A1F	B1F	BR1F	C1F	CR1F	D1F	DR1F	E1F	ER1F	59' - 2"	58' - 8¾"	4' - 7½"
A1G	B1G	BR1G	C1G	CR1G	D1G	DR1G	E1G	ER1G	58' - 11"	58' - 5¾"	4' - 4½"
A1H	B1H	BR1H	C1H	CR1H	D1H	DR1H	E1H	ER1H	58' - 8"	58' - 2¾"	4' - 1½"
A1J	B1J	BR1J	C1J	CR1J	D1J	DR1J	E1J	ER1J	58' - 7"	58' - 1¾"	4' - 0½"
A1K	B1K	BR1K	C1K	CR1K	D1K	DR1K	E1K	ER1K	58' - 6"	58' - 0¾"	3' - 11½"
A1M	B1M	BR1M	C1M	CR1M	D1M	DR1M	E1M	ER1M	58' - 3"	57' - 9¾"	3' - 8½"
A1N	B1N	BR1N	C1N	CR1N	D1N	DR1N	E1N	ER1N	57' - 9"	57' - 3¾"	3' - 2½"
A1P	B1P	BR1P	C1P	CR1P	D1P	DR1P	E1P	ER1P	57' - 7"	57' - 1¾"	3' - 0½"

LICENSED PROFESSIONAL ENGINEER
LESLIE E. ROBERTSON
No. 34360
UNIVERSITY OF THE STATE OF NEW YORK

7-AB3-2

1056-L

SKILLING - HELLE - CHRISTIANSEN - ROBERTSON Structural & Civil Enginoors

PROJECT THE WORLD TRADE CENTER | TITLE FLOOR PANEL A 1 | DATE 10-20-67

REVISIONS

1-3-68
1-26-68
2-15-68
4-1-68
7-22-68
10-15-68

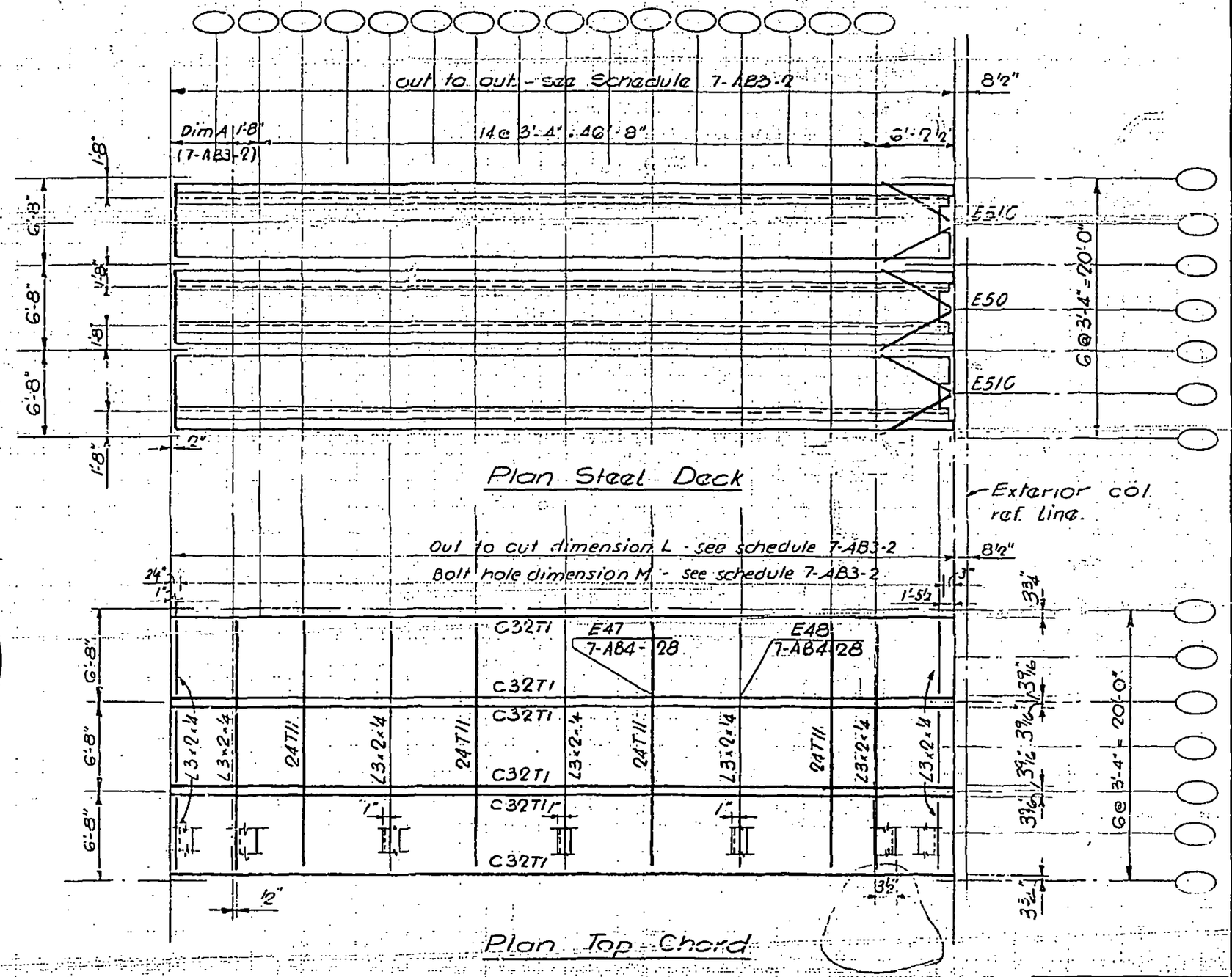

REGISTERED PROFESSIONAL ENGINEER LESLIE E. ROBERTSON No. 34360 OF THE STATE OF NEW YORK

25

7-AB3-3

SKILLING - HELLE - CHRISTIANSEN - ROBERTSON Structural & Civil Engineers

PROJECT THE WORLD TRADE CENTER | TITLE FLOOR PANEL A1G/E & A1J/6 | DATE 10-20-67

REVISIONS

1-3-68
1-26-68
2-15-68
4-1-68
7-22-68
10-15-68

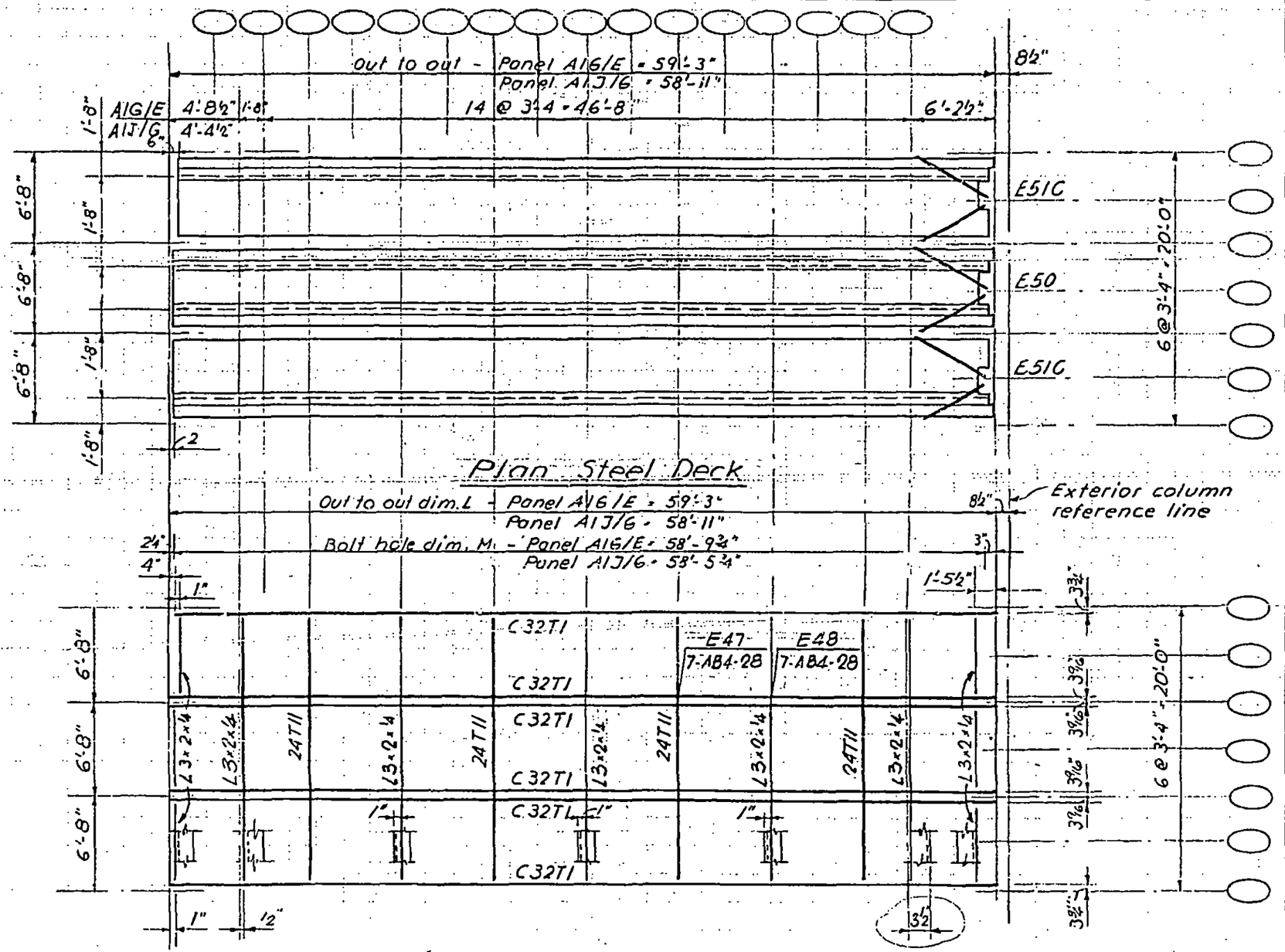

7-AB3-4

LICENSED PROFESSIONAL ENGINEER LESLIE E. ROBERTSON No. 34360 STATE OF NEW YORK

SKILLING - HELLE - CHRISTIANSEN - ROBERTSON Structural & Civil Engineers

PROJECT THE WORLD TRADE CENTER | TITLE FLOOR PANEL B1 | DATE 10-20-67

REVISIONS

1-3-68
1-26-68
2-15-68
4-1-68
7-22-68
10-15-68

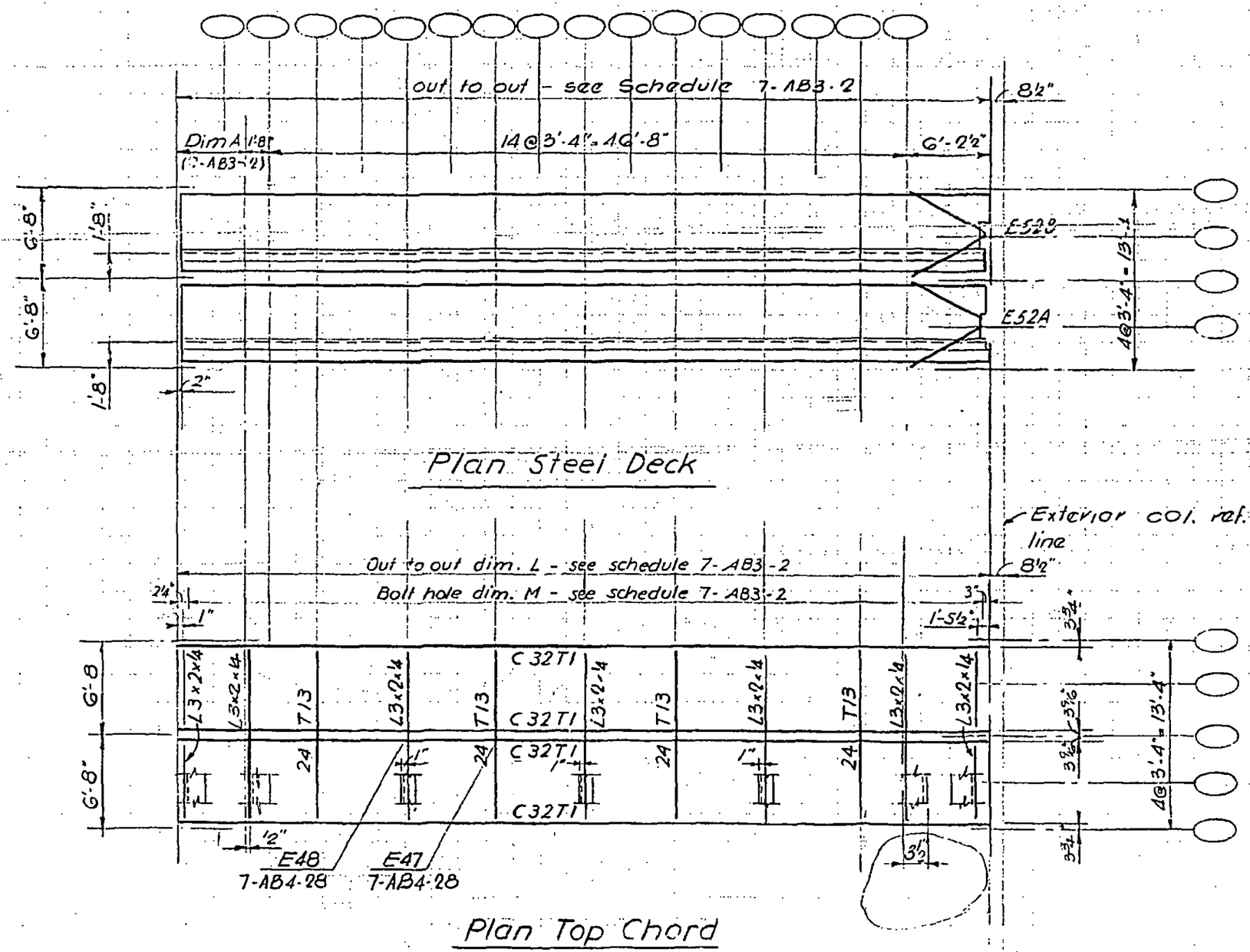

LICENSED PROFESSIONAL ENGINEER
LESLIE E. ROBERTSON
No. 34360
OF THE STATE OF NEW YORK

7-AB3-5

SKILLING - HELLE - CHRISTIANSEN - ROBERTSON Structural & Civil Engineers

PROJECT THE WORLD TRADE CENTER | TITLE FLOOR PANEL BR1 | DATE 10·20·67

REVISIONS

1-3-68
1-26-68
2-15-68
4-1-68
7-22-68
10-15-68

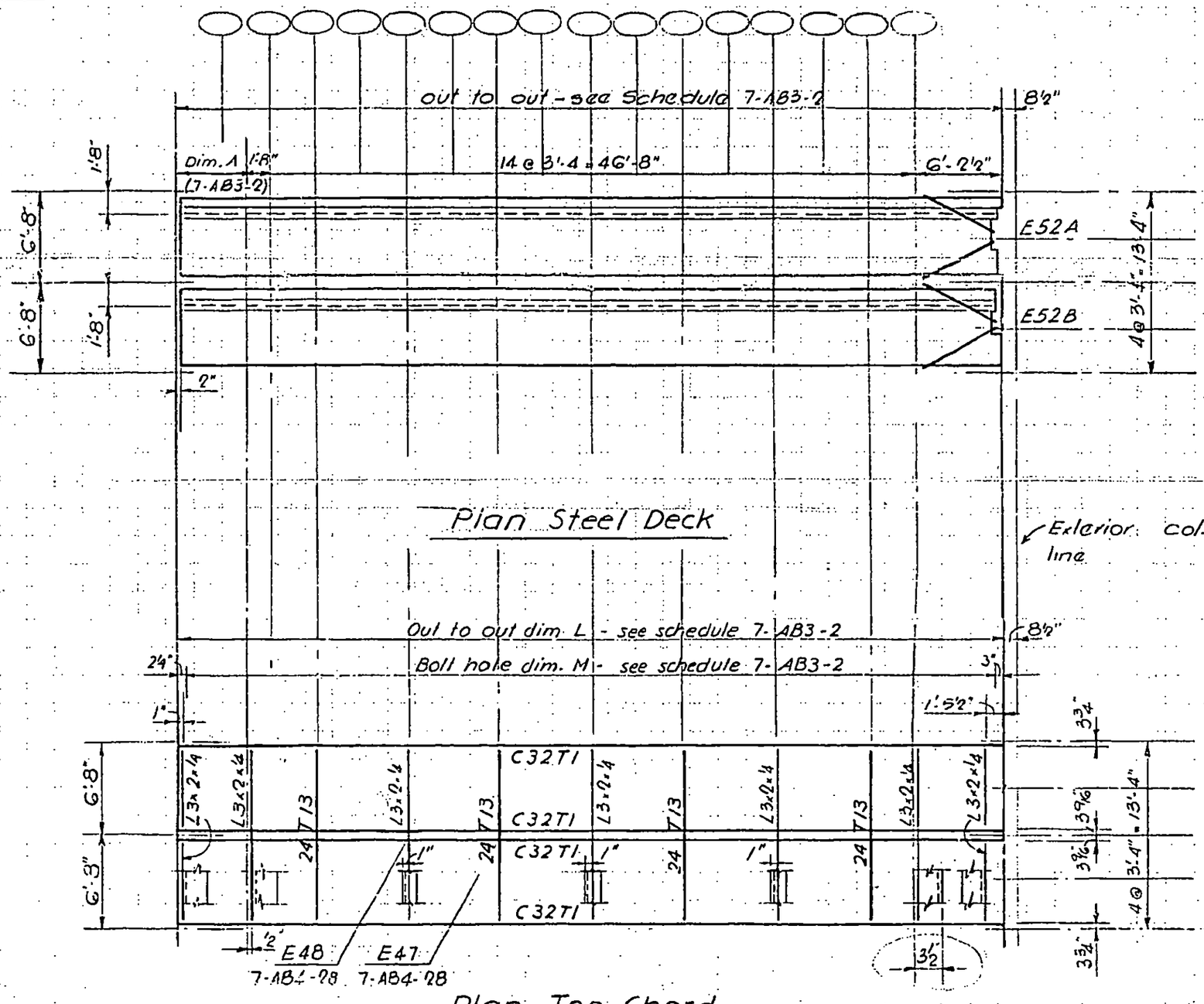

LICENSED PROFESSIONAL ENGINEER
LESLIE E. ROBERTS
No. 34310
UNIVERSITY OF THE STATE

28

7-AB3-6

SKILLING - HELLE - CHRISTIANSEN - ROBERTSON Structural & Civil Engineers

PROJECT THE WORLD TRADE CENTER | TITLE FLOOR PANEL C1 | DATE 10-20-67

REVISIONS

1-3-68
1-26-68
2-15-68
4-1-68
7-22-68
10-15-68

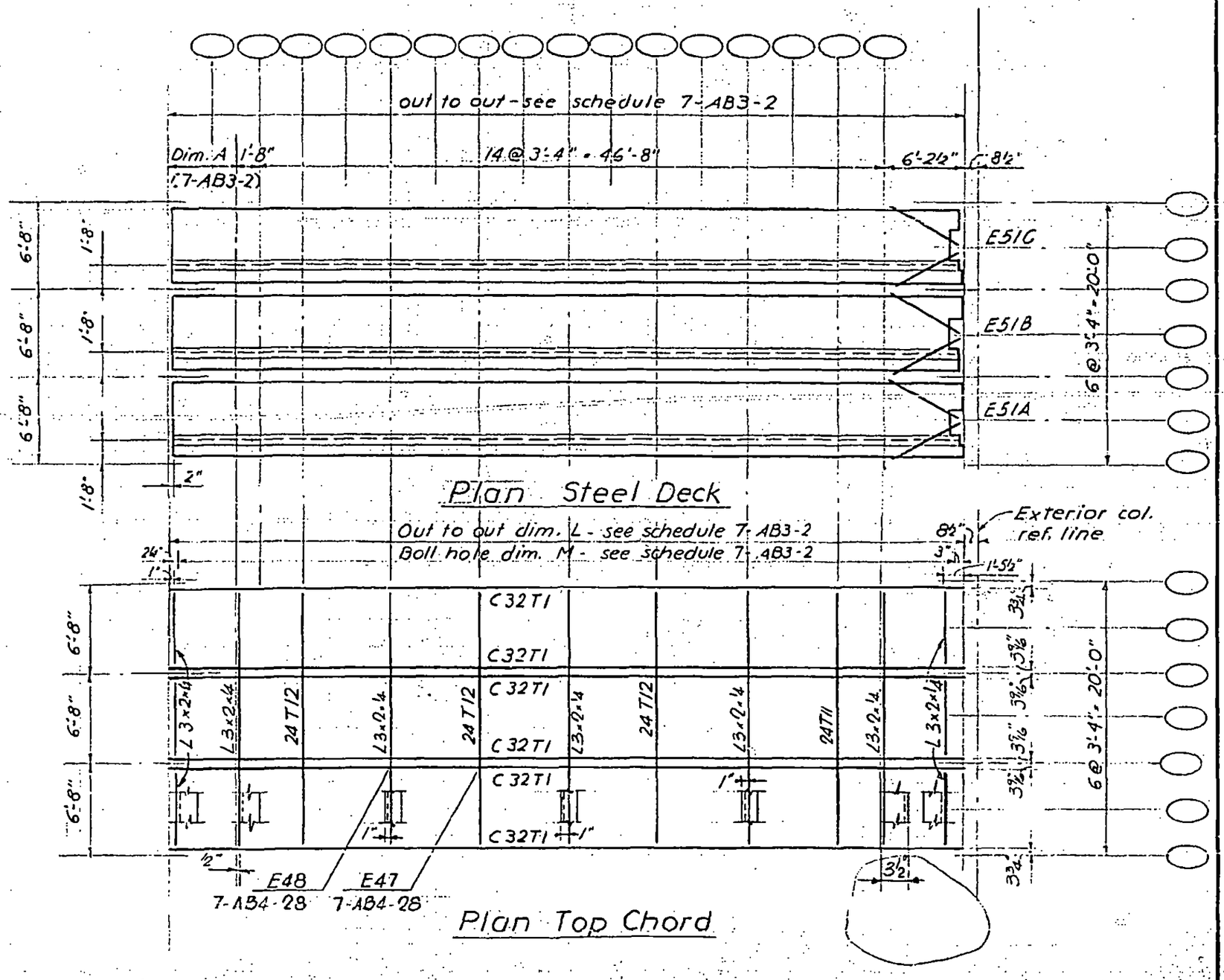

LICENSED PROFESSIONAL ENGINEER LESLIE E. ROBERTSON No. 34360 STATE OF NEW YORK UNIVERSITY OF THE STATE OF N.Y.

7-AB3-7

SKILLING - HELLE - CHRISTIANSEN - ROBERTSON Structural & Civil Engineers

PROJECT THE WORLD TRADE CENTER | TITLE FLOOR PANEL CR1 | DATE 10-20-67

REVISIONS

1-3-68
1-26-68
2-15-68
4-1-68
7-22-68
10-15-68

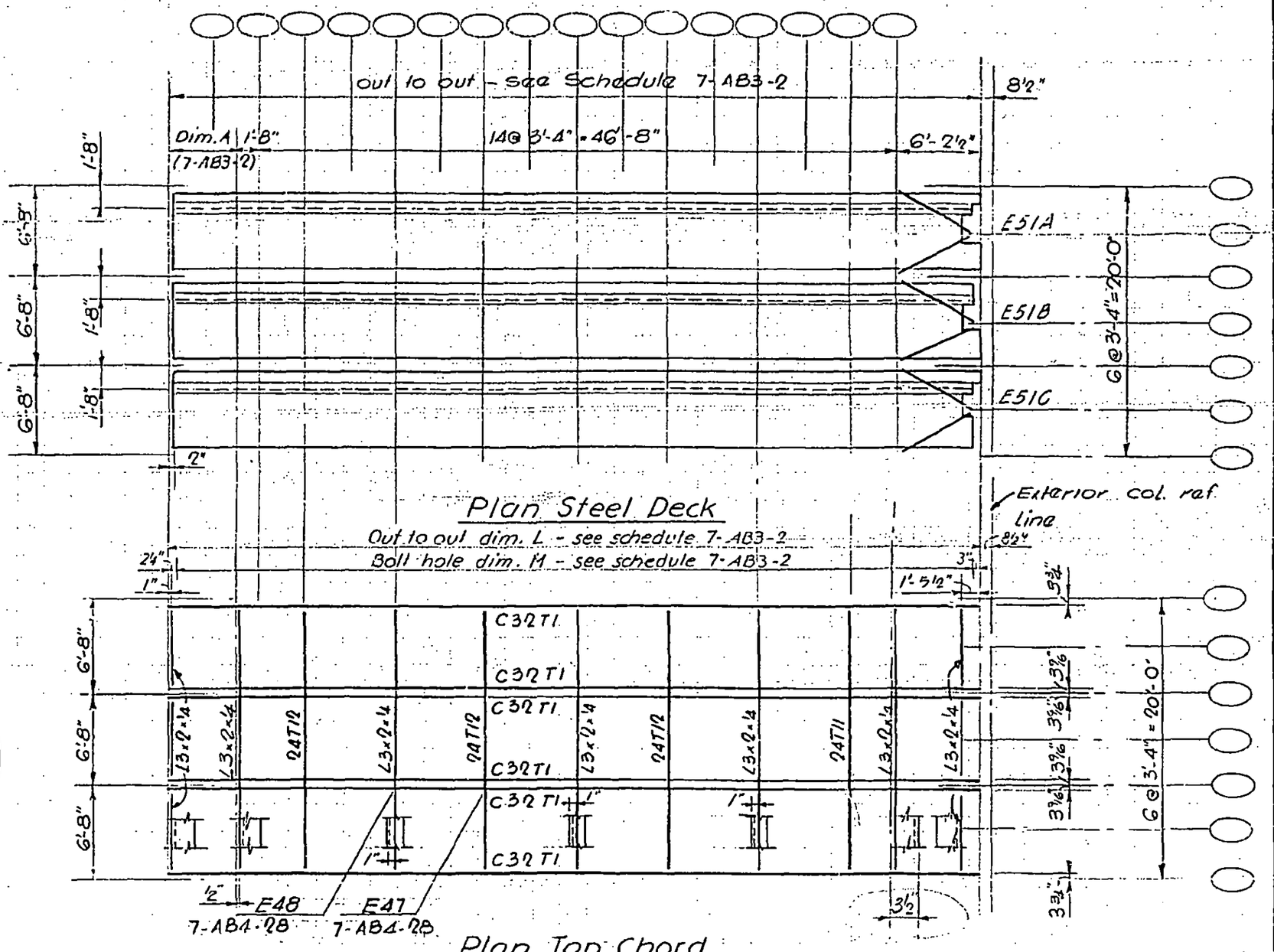

LICENSED PROFESSIONAL ENGINEER LESLIE E. ROBERTSON No. 34360 STATE OF NEW YORK

7-AB3-8

SKILLING - HELLE - CHRISTIANSEN - ROBERTSON Structural & Civil Enginoors

PROJECT THE WORLD TRADE CENTER | TITLE FLOOR PANEL D1 | DATE 10-20-67

REVISIONS

1-3-68
1-26-68
4-1-68
4-15-68
7-22-68
10-15-68

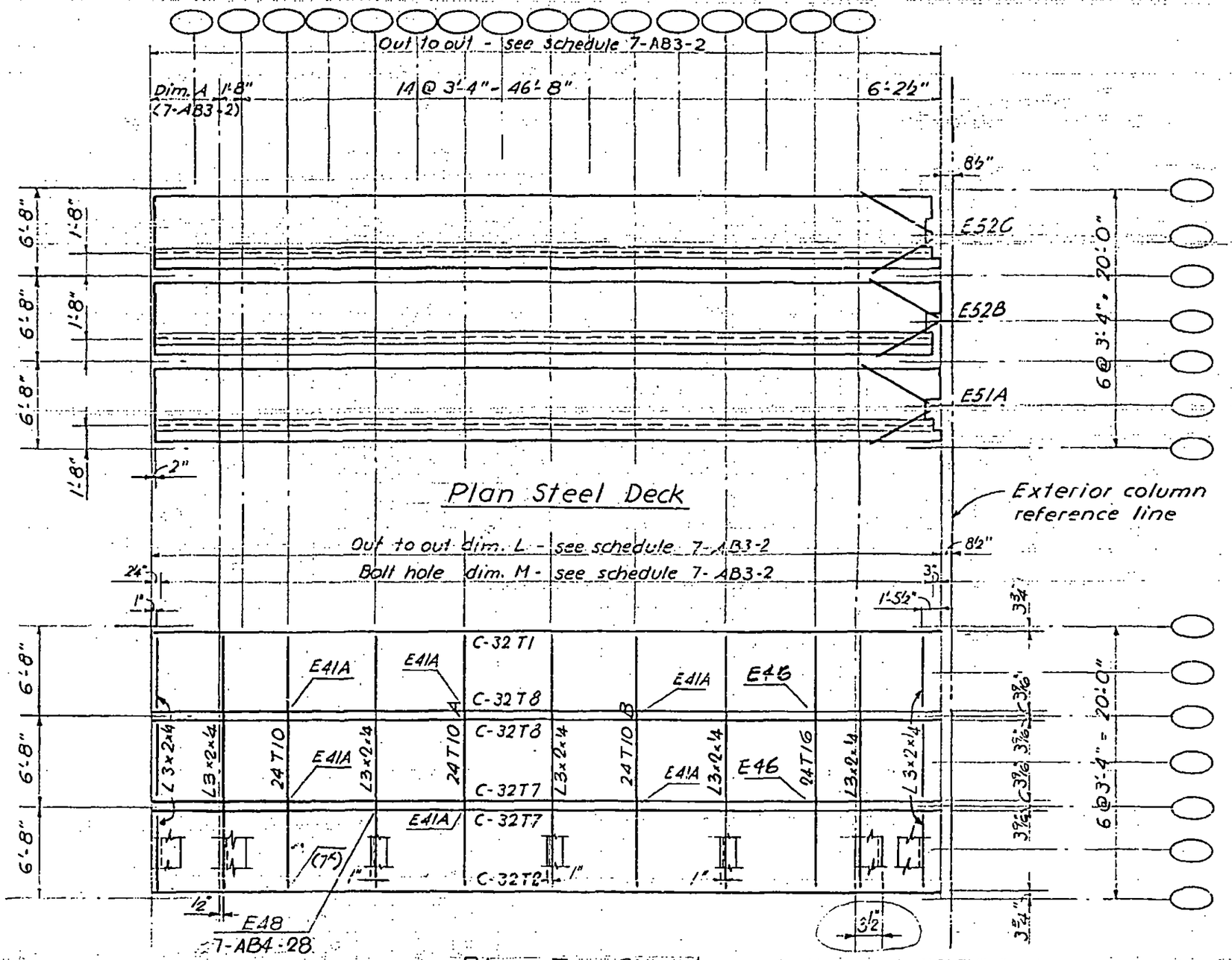

Plan Steel Deck

Plan Top Chord

E46 see 7-AB4-22.1
E41A see 7-AB4-22

7-AB3-9

LICENSED PROFESSIONAL ENGINEER LESLIE E. ROBERTSON No. 34360 UNIVERSITY OF THE STATE OF NEW YORK

SKILLING - HELLE - CHRISTIANSEN - ROBERTSON — Structural & Civil Engineers

PROJECT THE WORLD TRADE CENTER | TITLE FLOOR PANEL DRI | DATE 10-20-67

REVISIONS

1-3-68
1-26-68
4-1-68
4-15-68
7-22-68
10-15-68

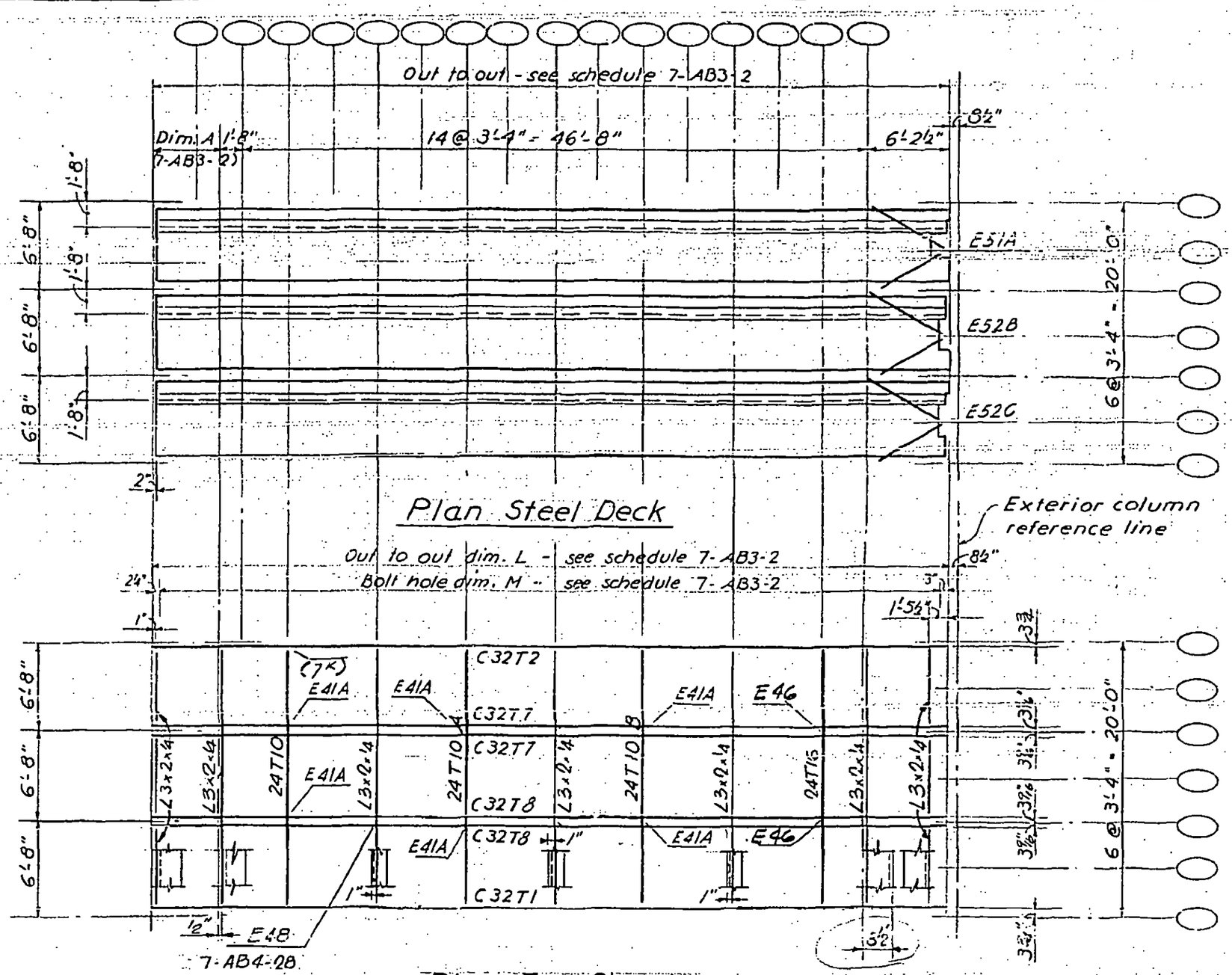

LICENSED PROFESSIONAL ENGINEER — LESLIE E. ROBERTS — No. 34360 — UNIVERSITY OF THE STATE OF NEW YORK

7-AB3-10

SKILLING - HELLE - CHRISTIANSEN - ROBERTSON Structural & Civil Engineers

PROJECT THE WORLD TRADE CENTER | TITLE FLOOR PANEL E1 | DATE 10-20-67

REVISIONS

1-3-68
1-26-68
4-1-68
4-15-68
5.10.68
7-22-68
10-15-68

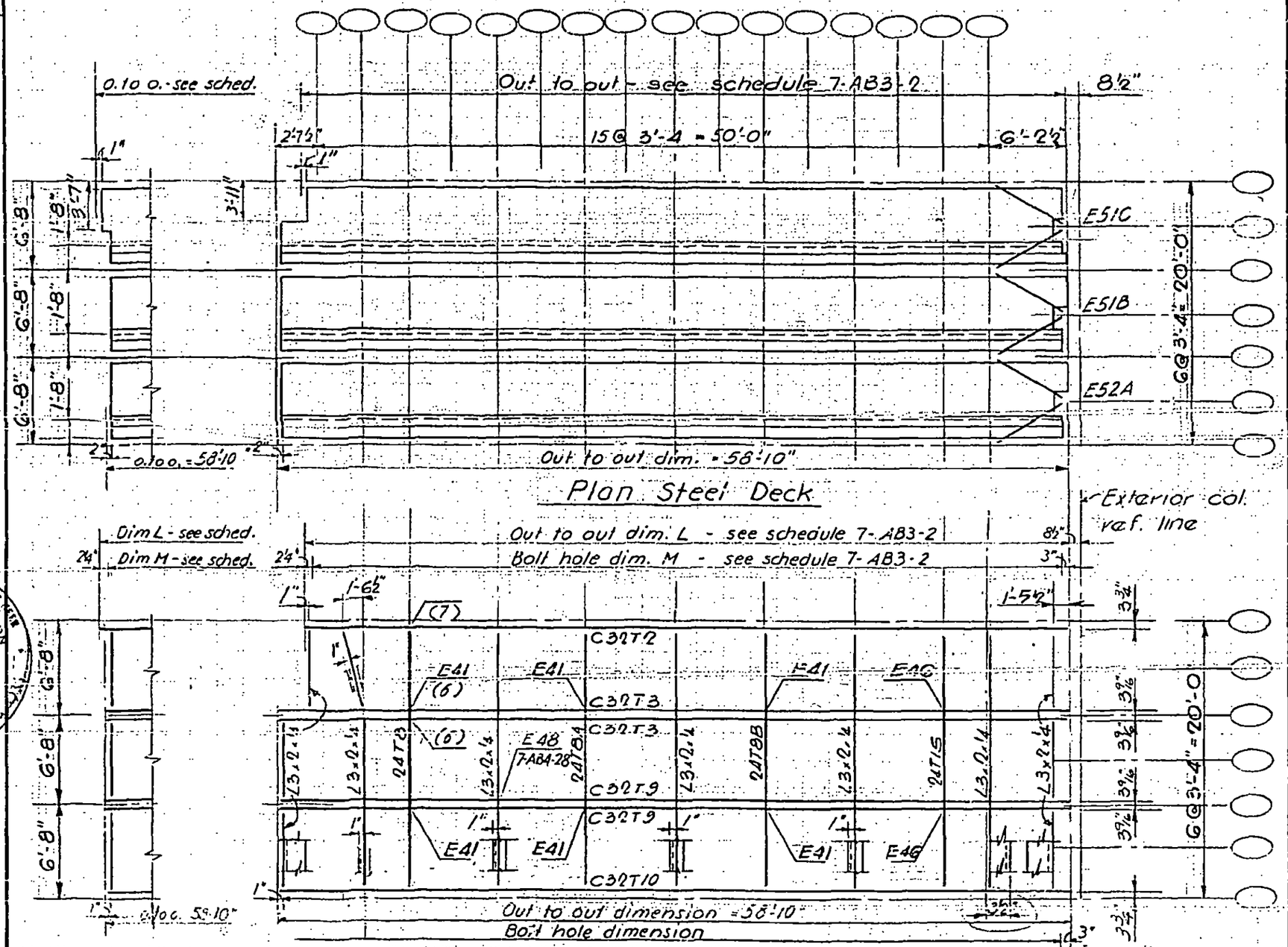

LICENSED PROFESSIONAL ENGINEER
LESLIE E. ROBERTSON
No. 34300
UNIVERSITY OF ILLINOIS

7-AB3-11

SKILLING - HELLE - CHRISTIANSEN - ROBERTSON — Structural & Civil Engineers

PROJECT THE WORLD TRADE CENTER | TITLE FLOOR PANEL ER1 | DATE 10-20-67

REVISIONS

1-3-68
1-26-68
4-1-68
4-15-68
5-10-68
7-22-68
10-15-68

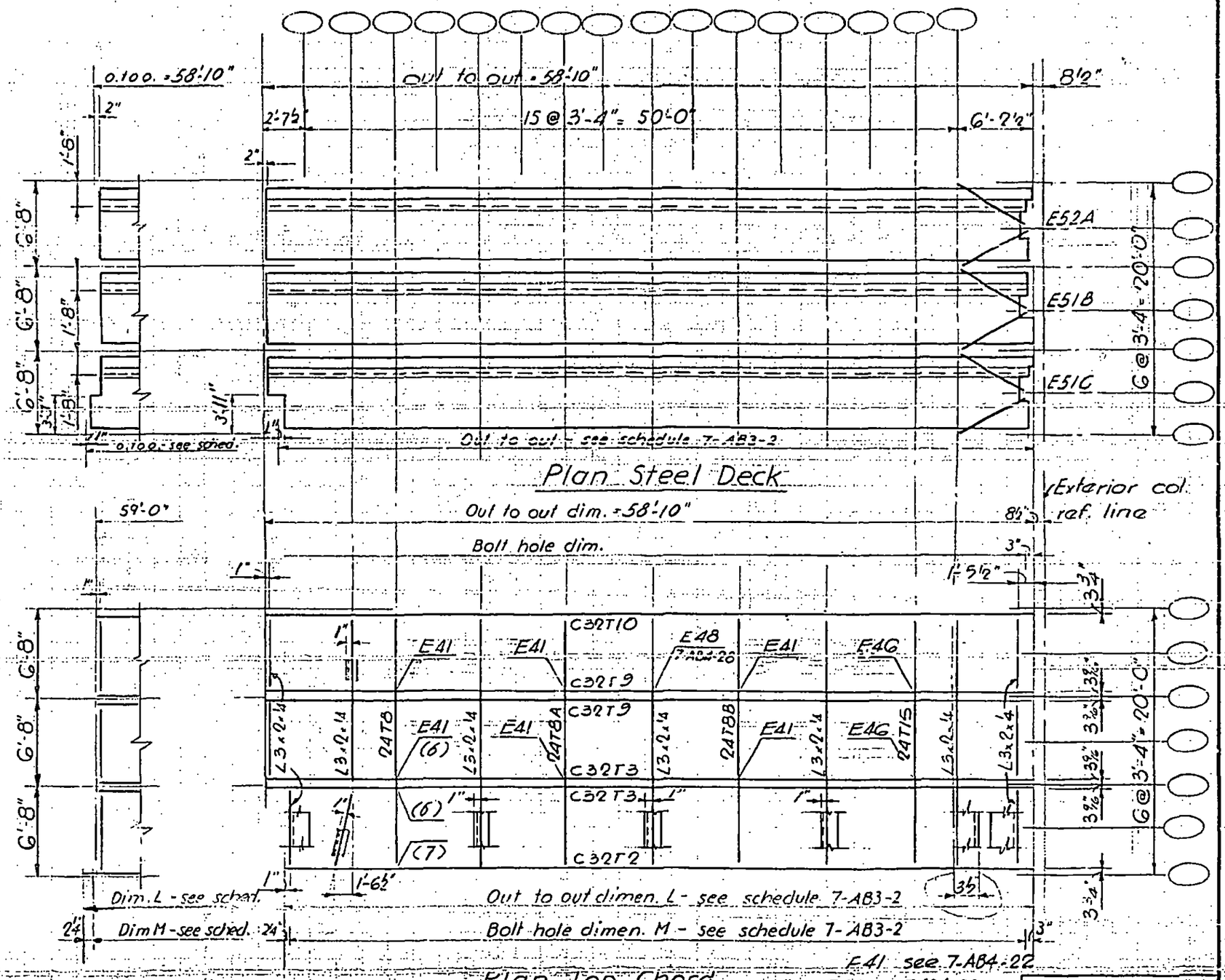

LICENSED PROFESSIONAL ENGINEER — LESLIE E. ROBERTSON — No. 34360 — REGISTERED IN THE STATE OF N.Y.

7-AB3-12

SKILLING - HELLE - CHRISTIANSEN - ROBERTSON Structural & Civil Engineers

PROJECT THE WORLD TRADE CENTER | TITLE FLOOR PANEL F1 | DATE 10-20-67

REVISIONS

1-3-68
1-26-68
4-1-68
5-10-68
7-22-68
10-15-68

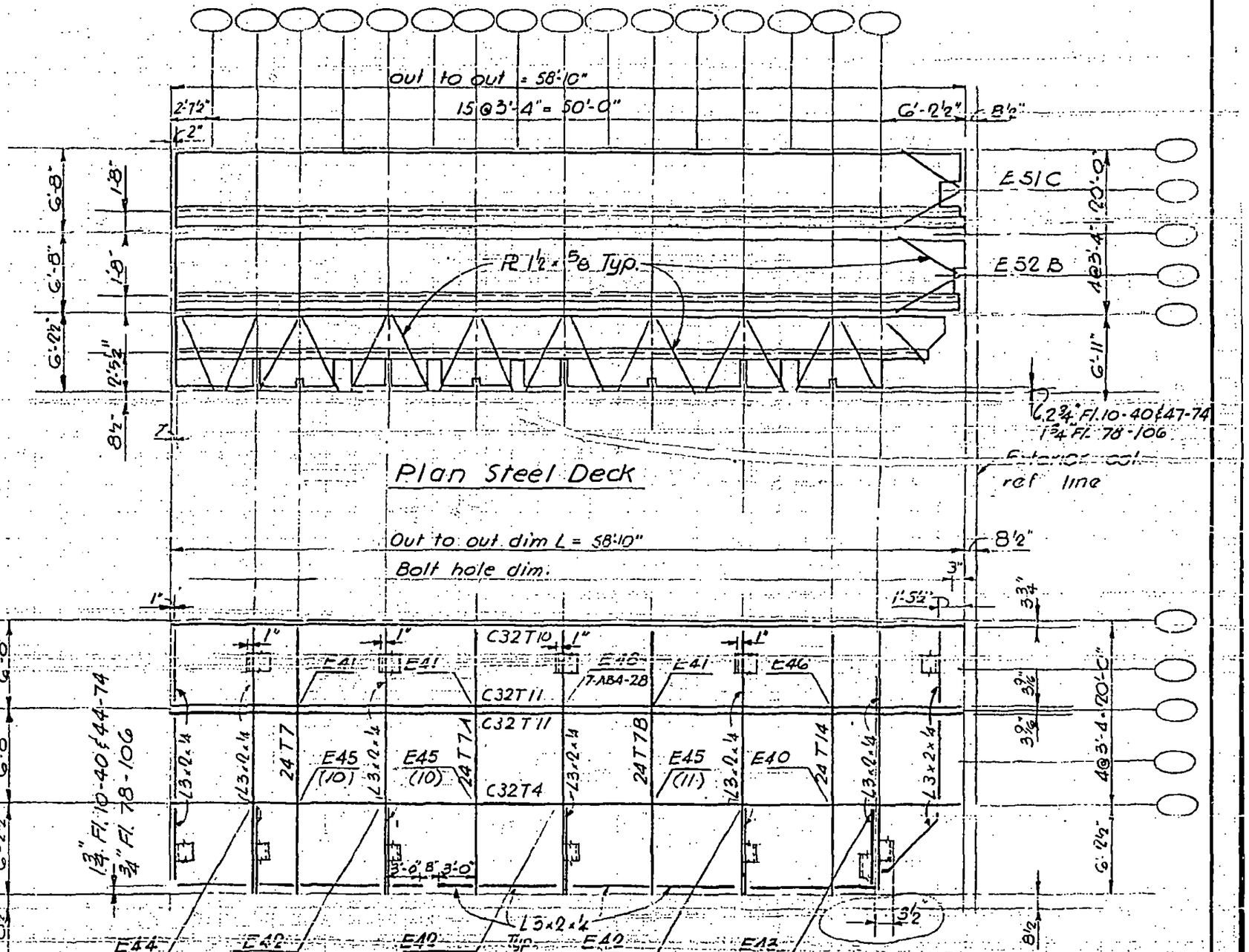

LICENSED PROFESSIONAL ENGINEER LESLIE E. ROBERTSON No. 34360 UNIVERSITY OF THE STATE OF N.Y.

35

SKILLING - HELLE - CHRISTIANSEN - ROBERTSON — Structural & Civil Engineers

PROJECT: THE WORLD TRADE CENTER | TITLE: FLOOR PANEL FR1 | DATE: 10-20-67

REVISIONS

1-3-68
1-26-68
4-1-68
5-10-68
7-22-68
10-15-68

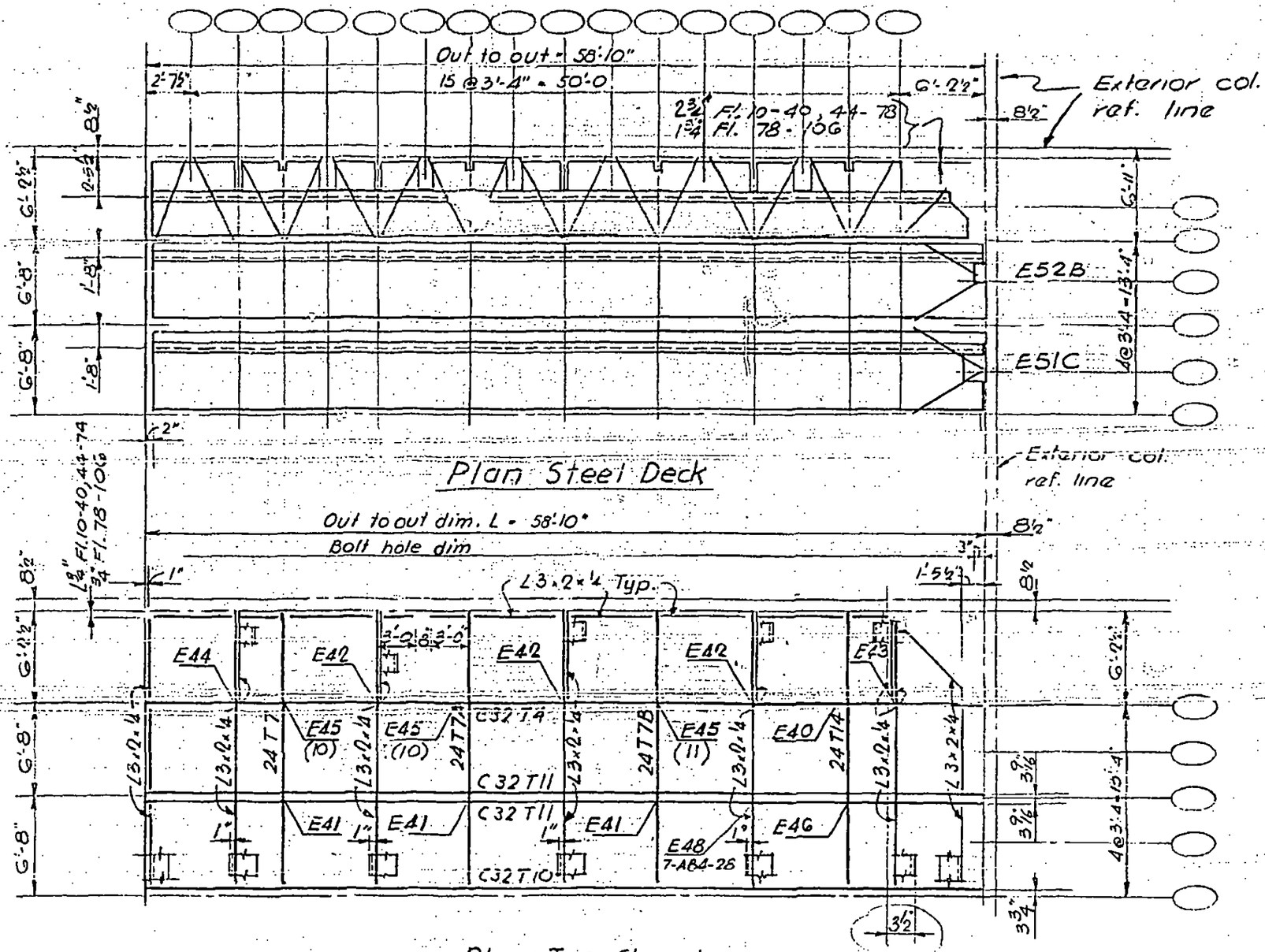

E40-E46 see 7-AB4-21-25

LICENSED PROFESSIONAL ENGINEER — LESLIE E. ROBERTSON — No. 34360 — UNIVERSITY OF THE STATE OF NEW YORK

7-AB5-14

SKILLING - HELLE - CHRISTIANSEN - ROBERTSON Structural & Civil Engineers

PROJECT THE WORLD TRADE CENTER | TITLE FLOOR PANEL 61 | DATE 10-20-67

REVISIONS

1-3-68
1-26-68
4-1-68
5-10-68
7-22-68

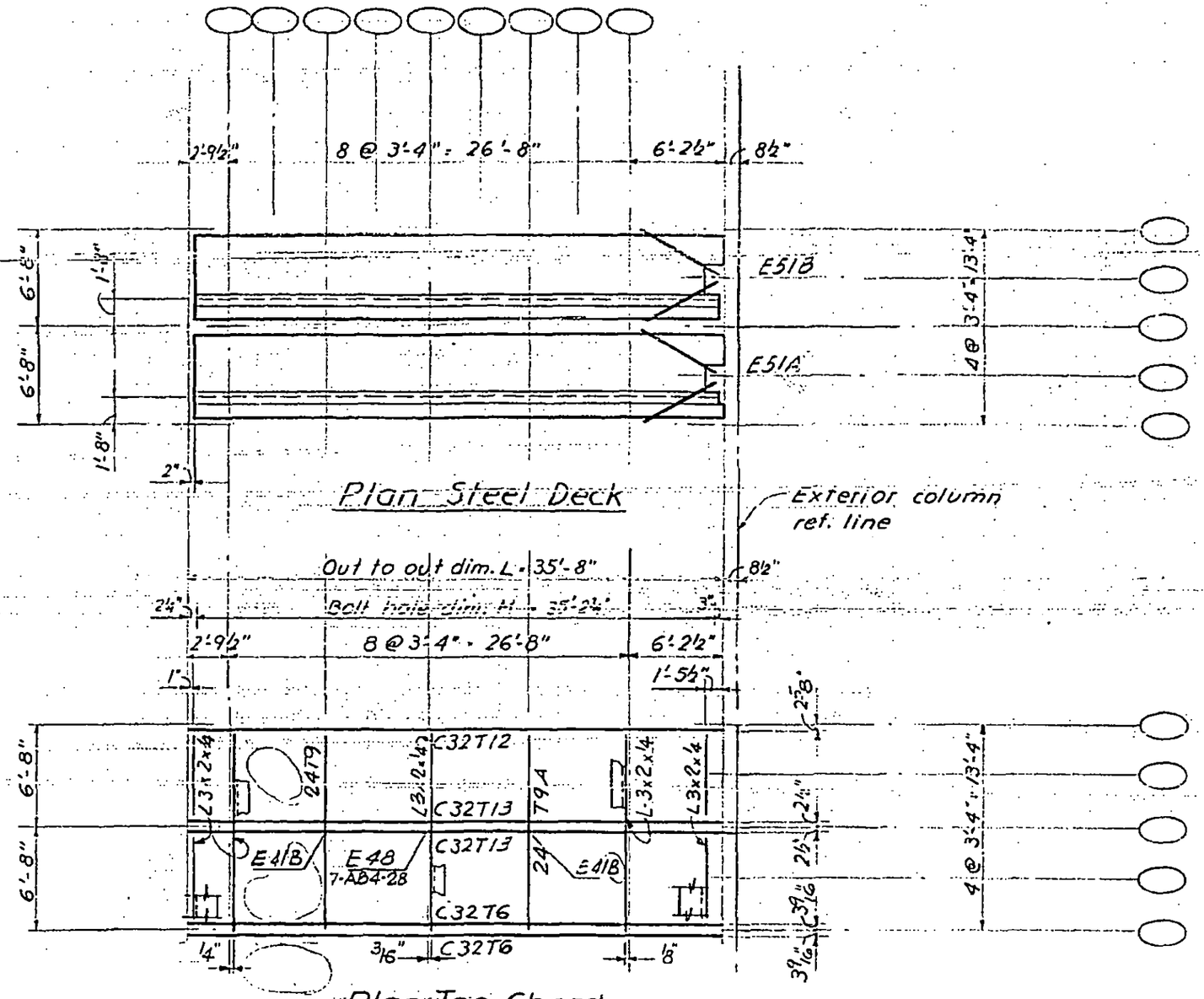

LICENSED PROFESSIONAL ENGINEER LESLIE E. ROBERTSON No. 34360 UNIVERSITY OF THE STATE OF NEW YORK

3.7

7-AB3-15

SKILLING - HELLE - CHRISTIANSEN - ROBERTSON Structural & Civil Enginoors

PROJECT THE WORLD TRADE CENTER | TITLE FLOOR PANEL 6R1 | DATE 10-20-67

REVISIONS

1-3-68
1-26-68
4-1-68
5-10-68
7-22-68

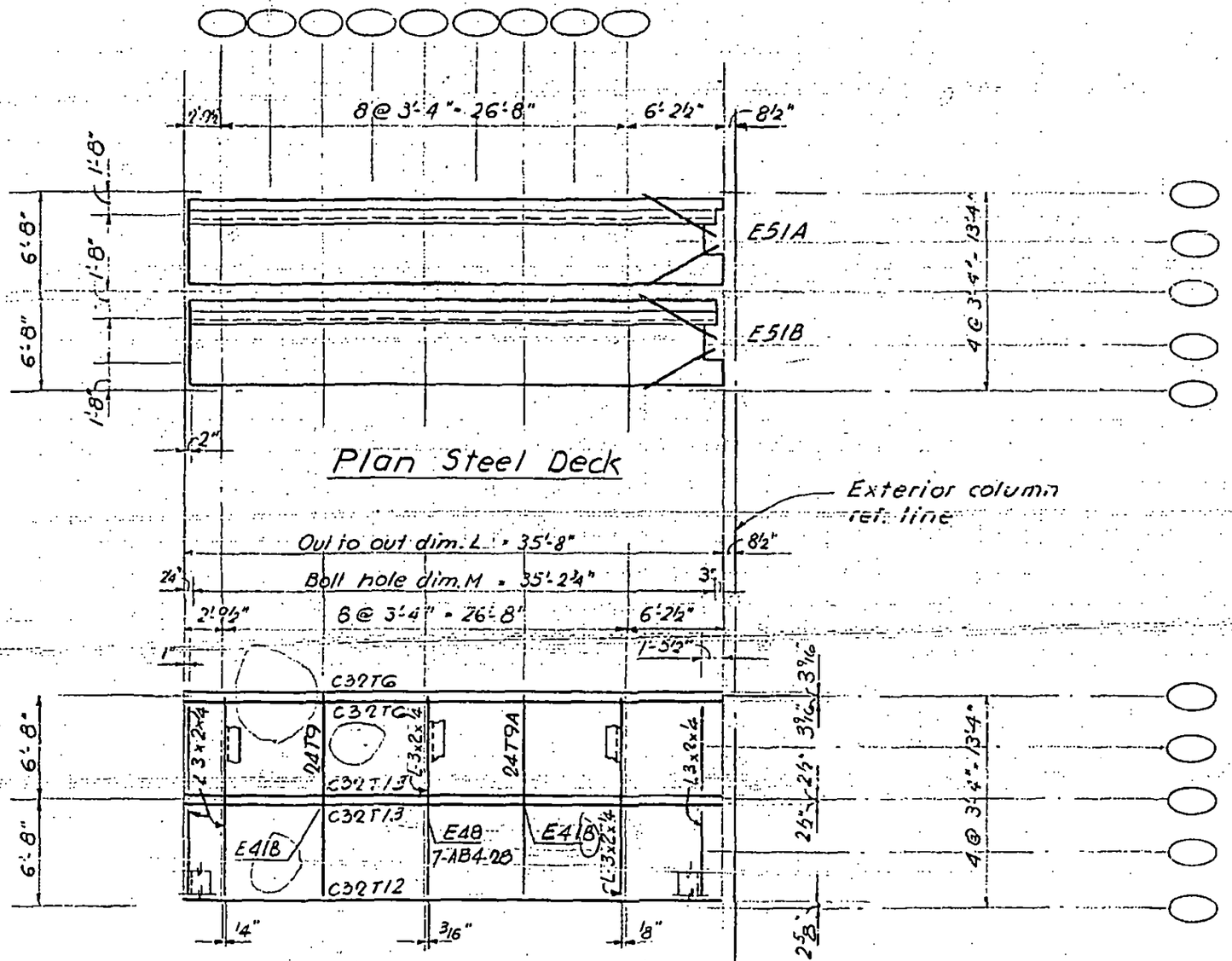

E41(B) See 7-AB4-22.1

LICENSED PROFESSIONAL ENGINEER LESLIE E. ROBERTS No. 34360 STATE OF NEW YORK

7-AB3-16

SKILLING - HELLE - CHRISTIANSEN - ROBERTSON Structural & Civil Engineers

PROJECT THE WORLD TRADE CENTER | TITLE FLOOR PANEL H1 | DATE 10-20-67

REVISIONS

1-3-68
1-26-68
2-15-68
4-1-68
5-10-68
7-22-68

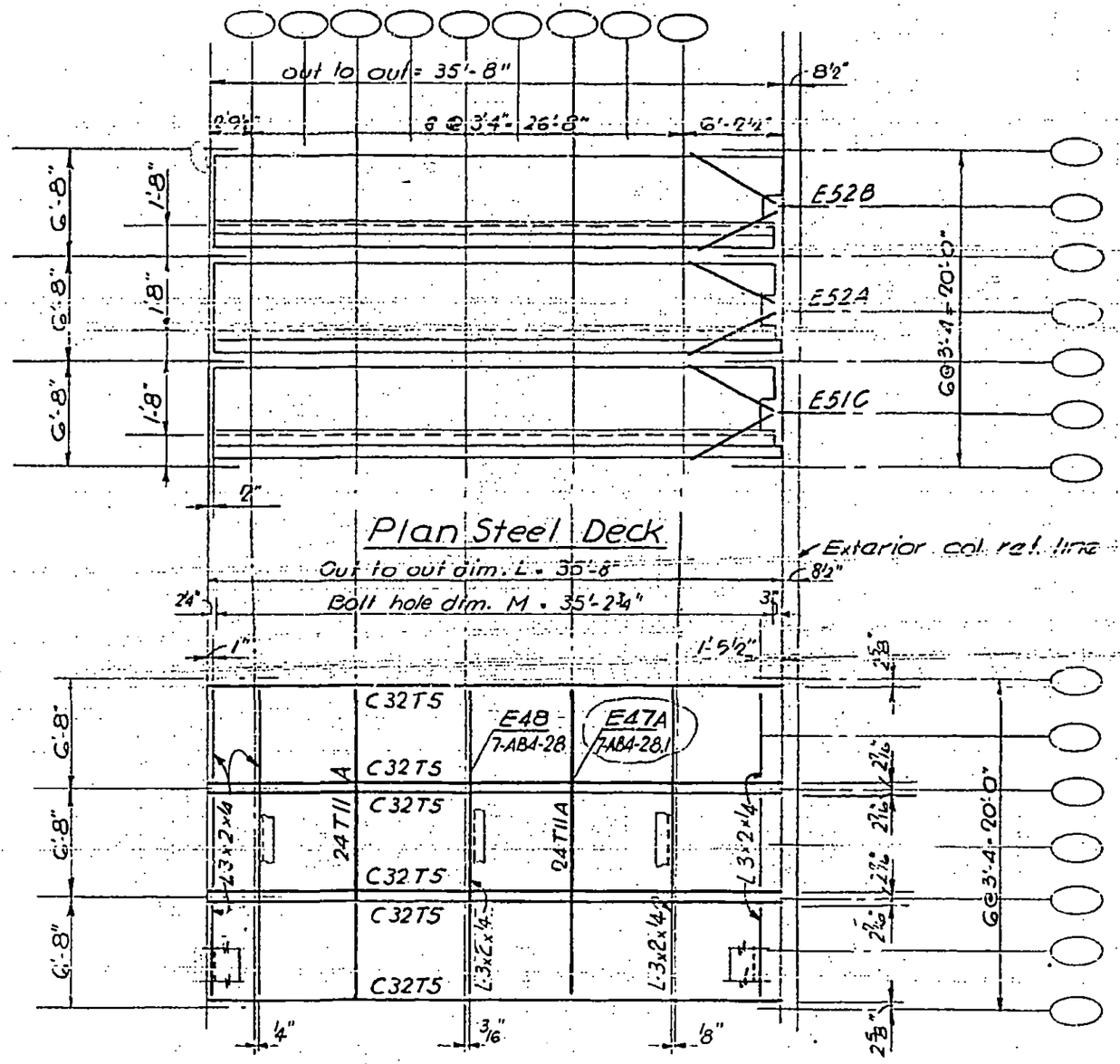

LICENSED PROFESSIONAL ENGINEER LESLIE E. ROBERTS No. 34360 UNIVERSITY OF THE STATE OF ALASKA

39

7-AB3-17

SKILLING - HELLE - CHRISTIANSEN - ROBERTSON Structural & Civil Engineers

PROJECT THE WORLD TRADE CENTER | TITLE FLOOR PANEL HRI & HRG | DATE 10-20-67

REVISIONS

1-3-68
1-26-68
2-15-68
4-1-68
5-10-68
7-22-68

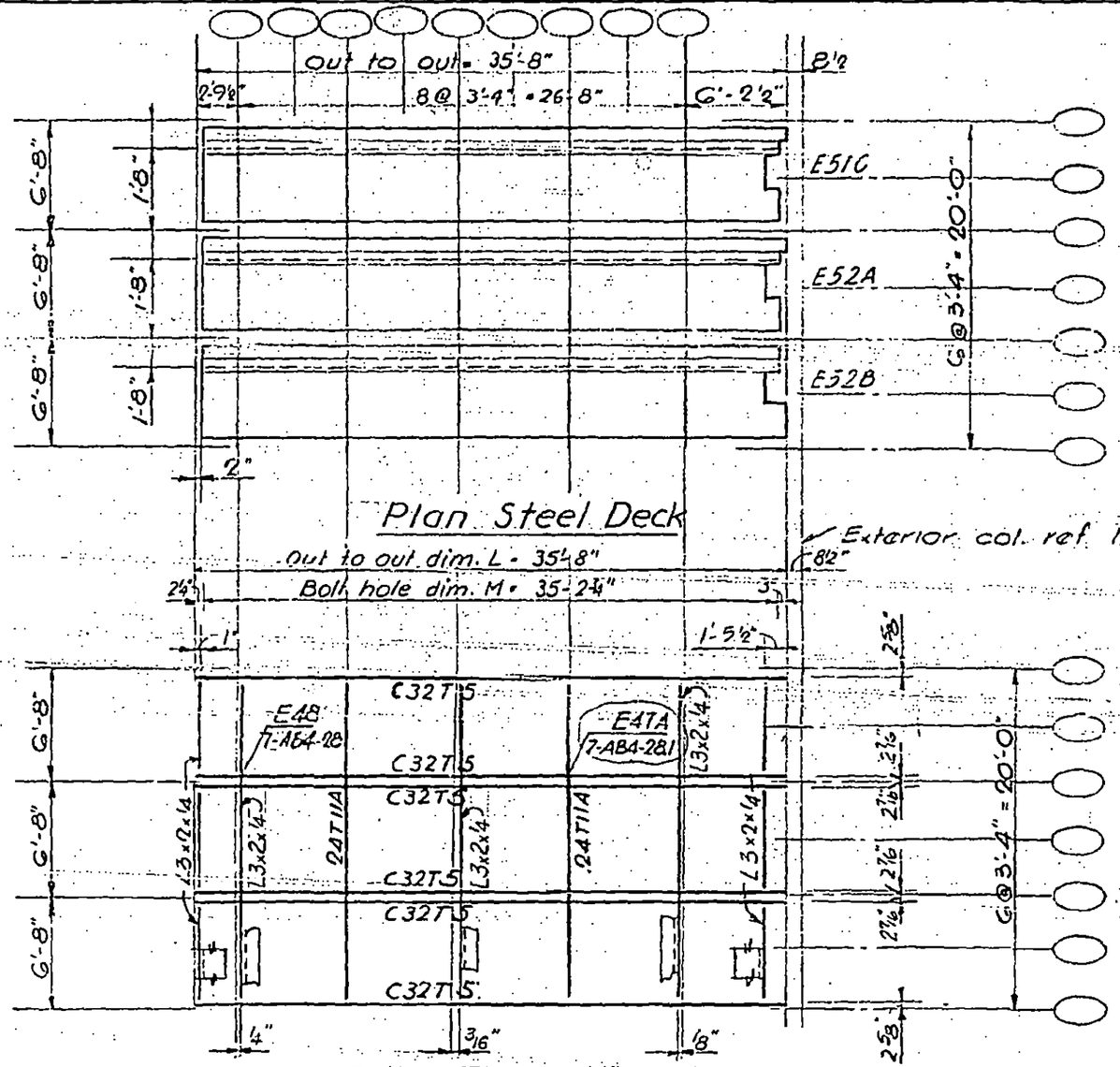

LICENSED PROFESSIONAL ENGINEER
LESLIE E. ROBERTSON
No. 34360
UNIVERSITY OF THE STATE OF NEW YORK

7-AB3-18

SKILLING - HELLE - CHRISTIANSEN - ROBERTSON Structural & Civil Engineers

PROJECT THE WORLD TRADE CENTER | TITLE FLOOR PANEL J1 | DATE 10-20-67

REVISIONS

1-3-68
1-26-68
2-15-68
4-1-68
5-10-68
7-22-68

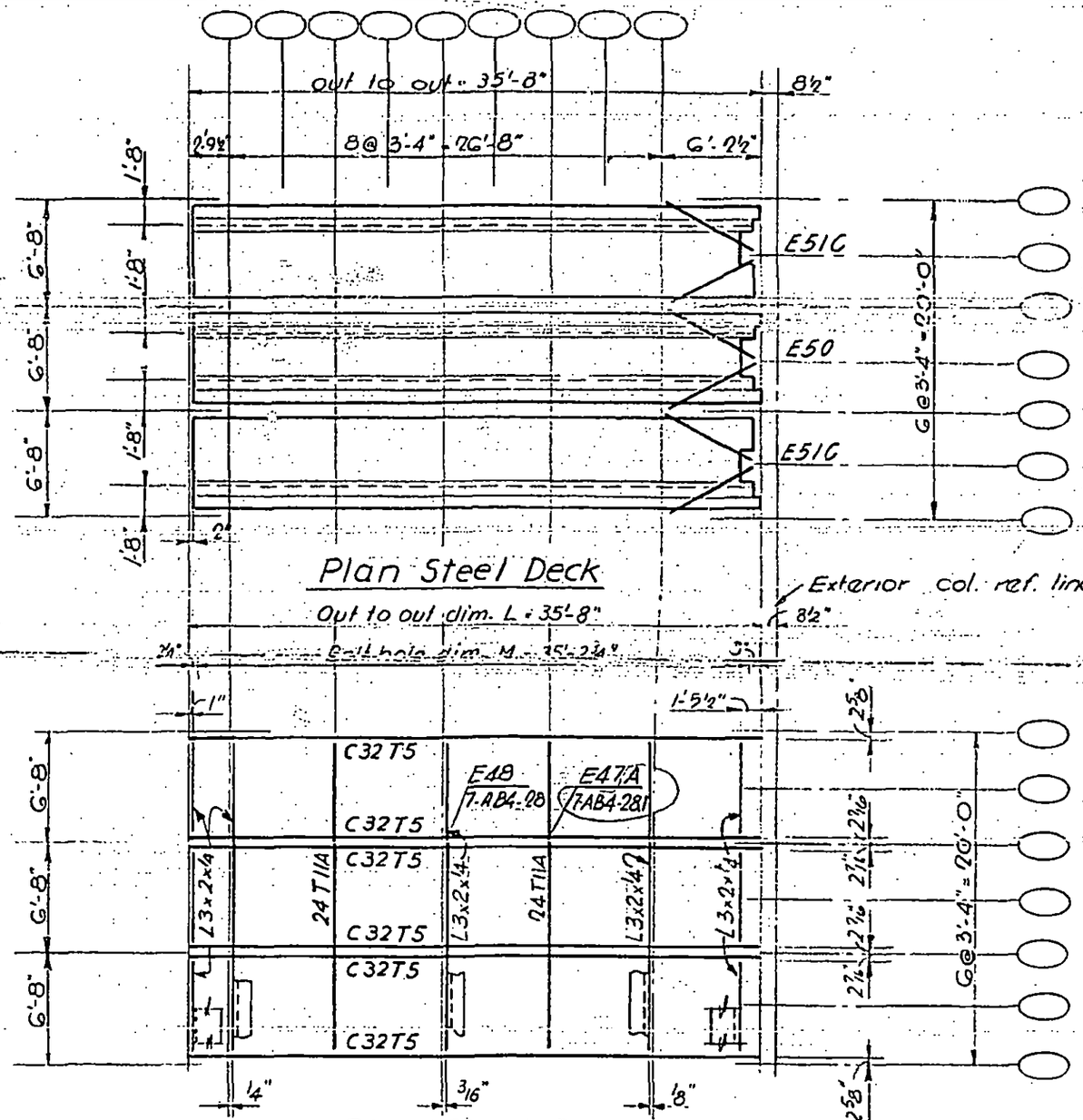

LICENSED PROFESSIONAL ENGINEER
LESLIE E. ROBERTSON
No. 34360
UNIVERSITY OF THE STATE OF NEW YORK

7-AB3-19

4/1

SKILLING - HELLE - CHRISTIANSEN - ROBERTSON Structural & Civil Engineers

PROJECT THE WORLD TRADE CENTER | TITLE FLOOR PANEL K1 | DATE 10-20-67

REVISIONS

1-3-68
1-26-68
2-15-68
4-1-68
5-10-68
7-22-68

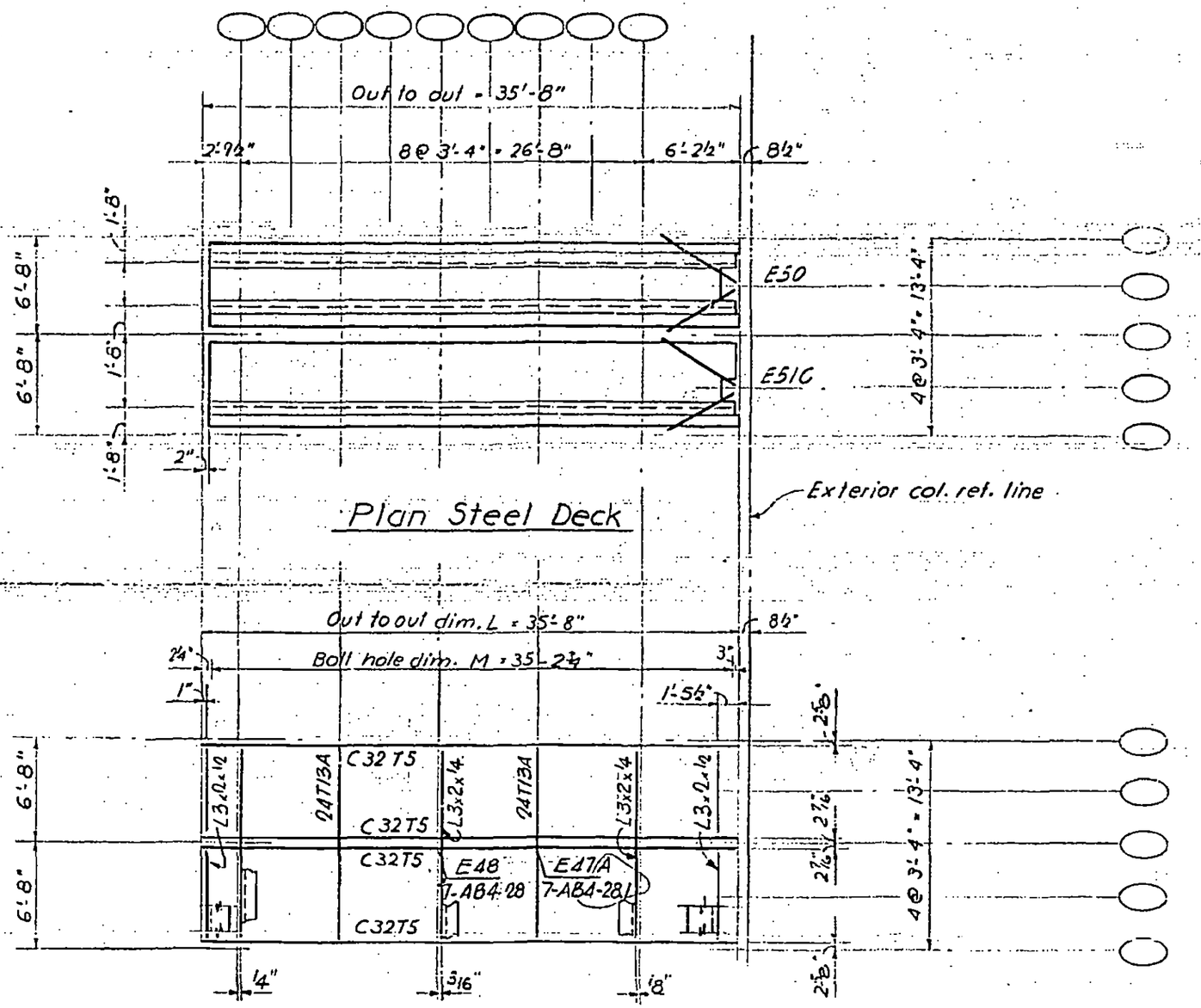

Plan Steel Deck

Plan Top Chord

LICENSED PROFESSIONAL ENGINEER
LESLIE E. ROBERTSON
No. 34360
UNIVERSITY OF THE STATE OF NEW YORK

4/2

7-AB3-20

SKILLING - HELLE - CHRISTIANSEN - ROBERTSON — Structural & Civil Engineers

PROJECT: THE WORLD TRADE CENTER | TITLE: FLOOR PANEL K R I | DATE: 10-20-67

REVISIONS

1-3-68
1-26-68
2-15-68
4-1-68
5-10-68
7-22-68

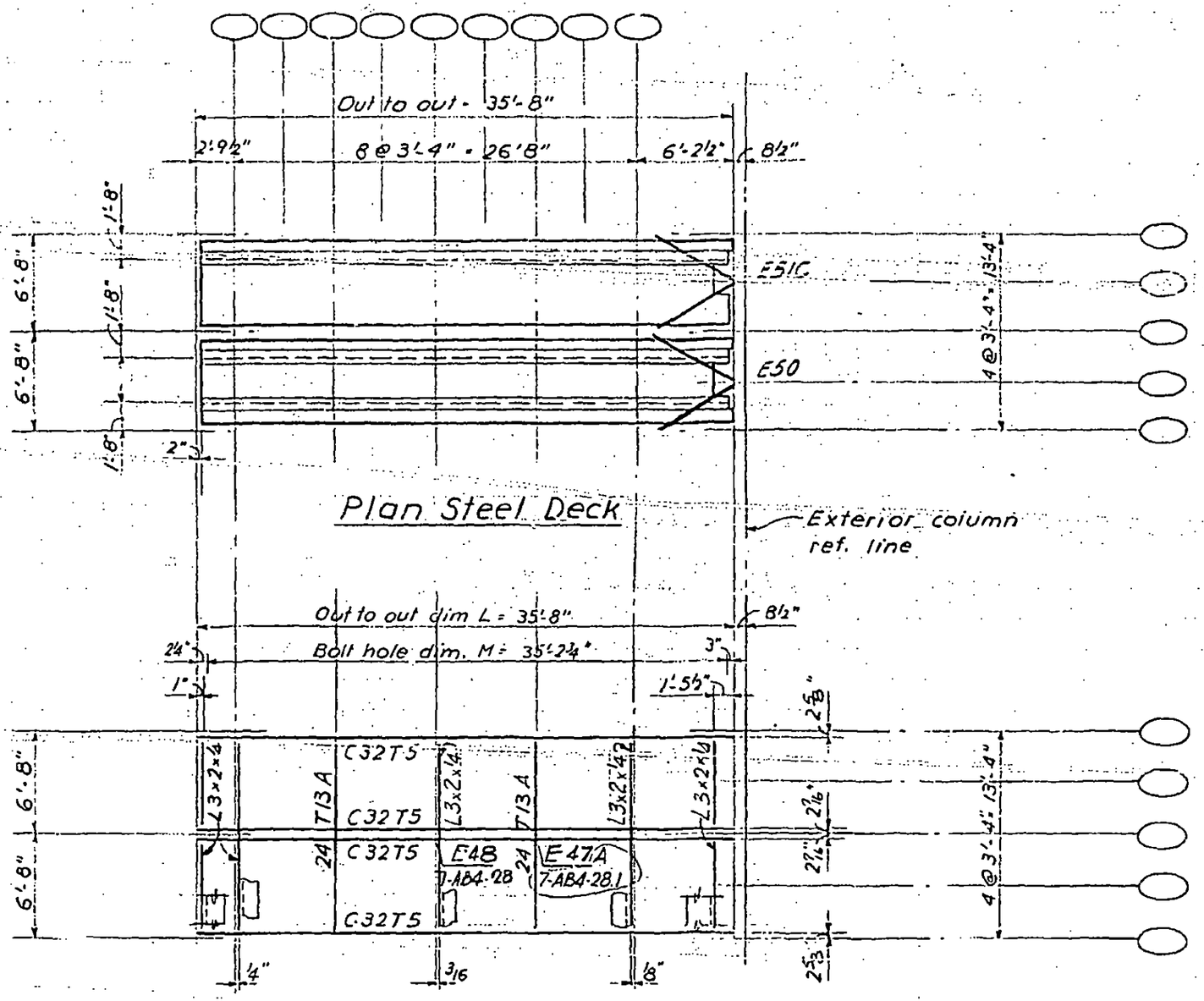

Plan Steel Deck

Plan Top Chord

LICENSED PROFESSIONAL ENGINEER
LESLIE E. ROBERTSON
No. 34360
UNIVERSITY OF THE STATE OF NEW YORK

7-AB3-21

SKILLING - HELLE - CHRISTIANSEN - ROBERTSON — Structural & Civil Engineers

PROJECT THE WORLD TRADE CENTER | TITLE FLOOR PANEL M1 | DATE 10-20-67

REVISIONS

1-3-68
1-26-68
2-15-68
4-1-68
5-10-68
7-22-68

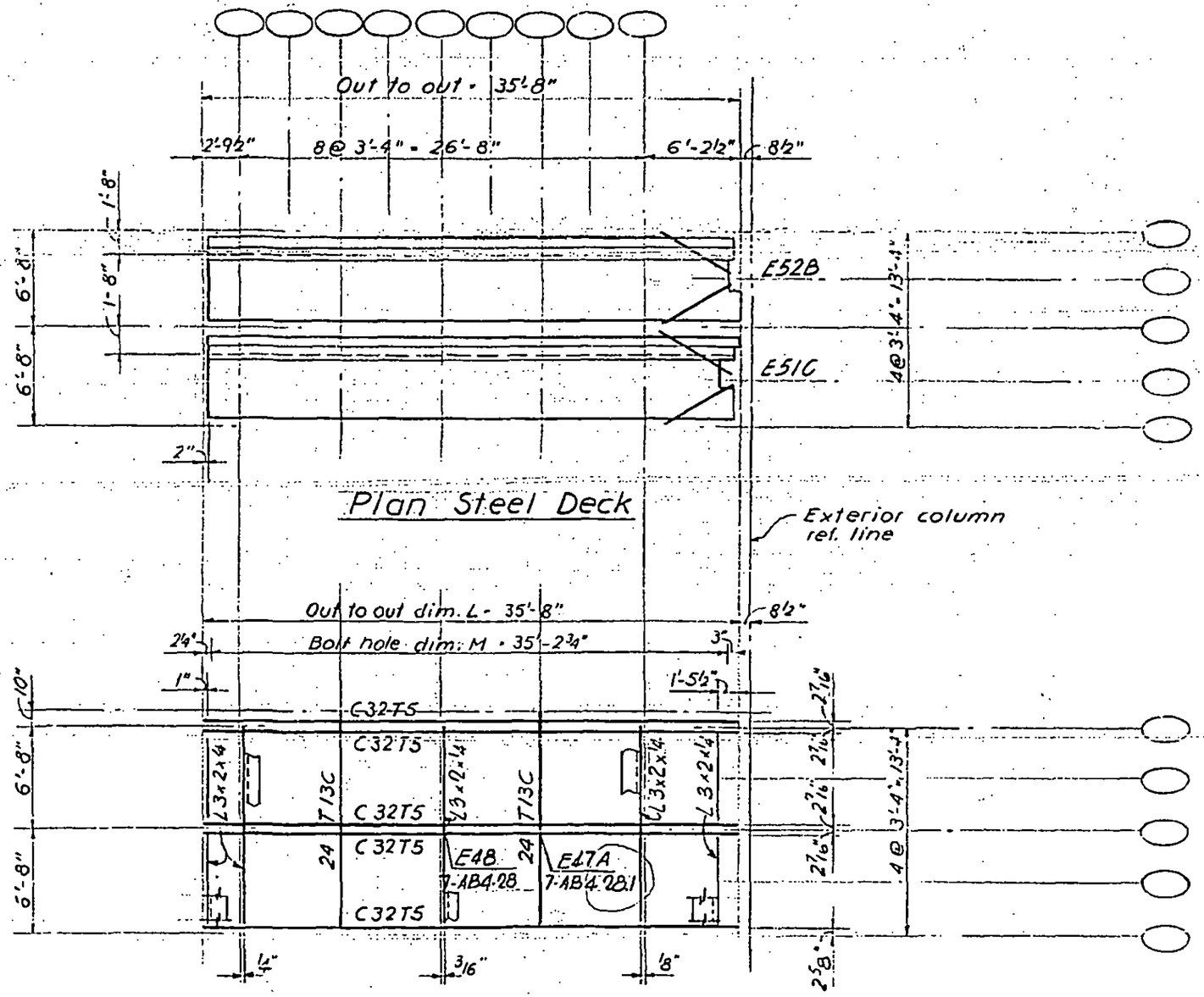

LICENSED PROFESSIONAL ENGINEER LESLIE E. ROBERTSON No. 34360 UNIVERSITY OF THE STATE OF NEW YORK

44

7-AB3-22

SKILLING - HELLE - CHRISTIANSEN - ROBERTSON Structural & Civil Engineers

PROJECT THE WORLD TRADE CENTER | TITLE FLOOR PANEL MR1 | DATE 10-20-67

REVISIONS

1-3-68
1-26-68
2-15-68
4-1-68
5-10-68
7-22-68

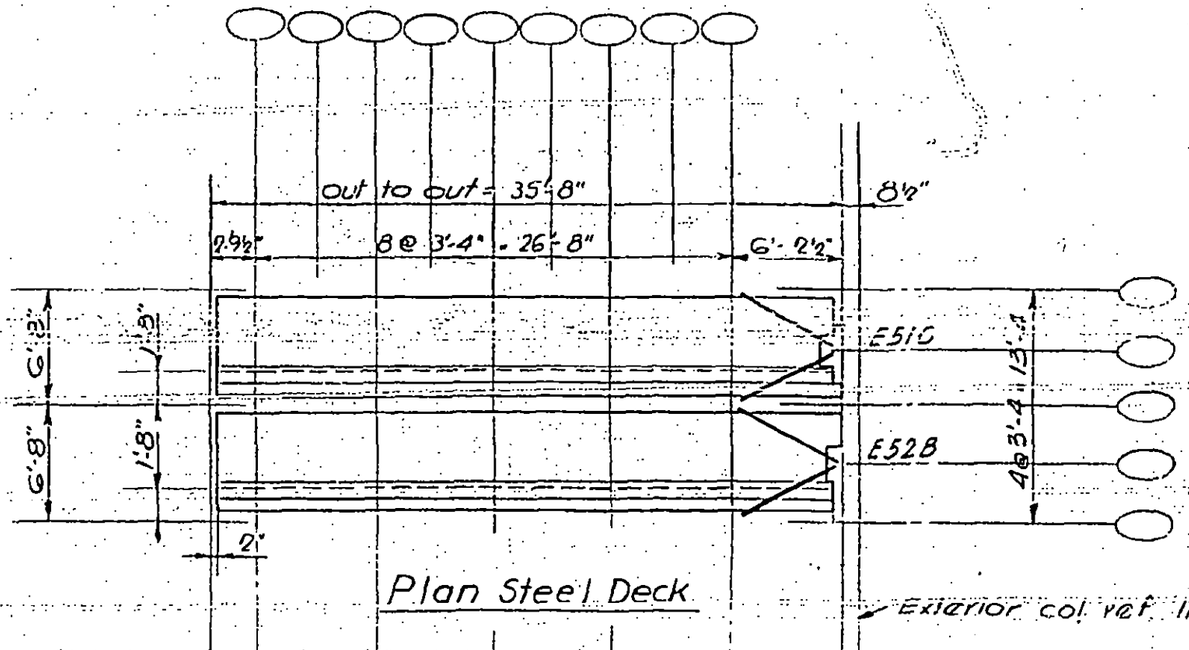

Plan Steel Deck

Exterior col. ref. line

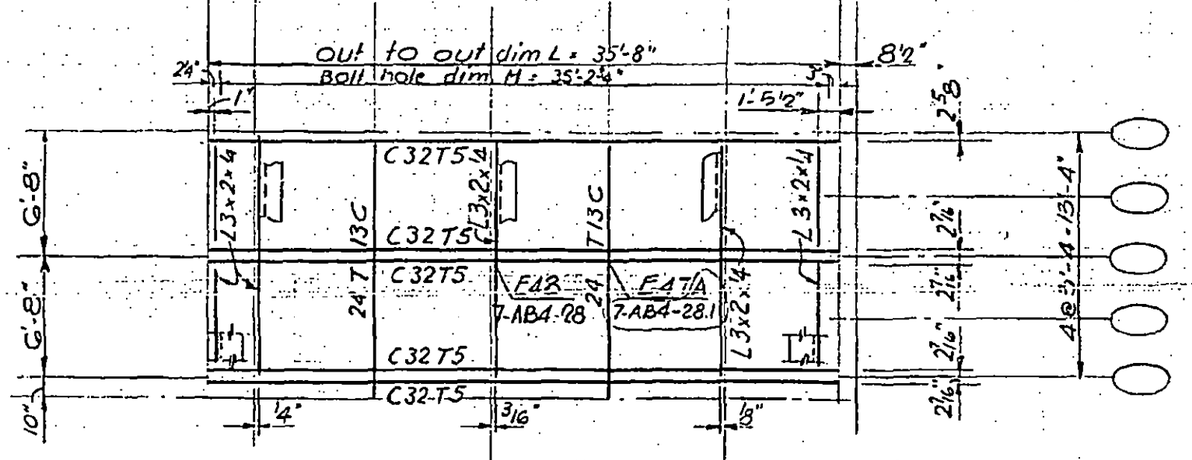

Plan Top Chord

LICENSED PROFESSIONAL ENGINEER
LESLIE E. ROBERTSON
No. 34...0
REGISTERED TO PRACTICE IN THE STATE OF NEW YORK

45

T-AB3-73

SKILLING - HELLE - CHRISTIANSEN - ROBERTSON — Structural & Civil Engineers

PROJECT: THE WORLD TRADE CENTER | TITLE: FLOOR PANEL - DIMENSION SCHEDULE 2 | DATE: 8-15-68

REVISIONS

PANEL NO.									OUT TO OUT PANEL DIM. L	BOLT HOLE DIMENSION M	DIMENSION A
A1A	B1A	BR1A	C1A	CR1A	D1A	DR1A	E1A	ER1A	59' - 9"	59' - 3¾"	5' - 2½"
A1B	B1B	BR1B	C1B	CR1B	D1B	DR1B	E1B	ER1B	59' - 8½"	59' - 3¼"	5' - 2"
A1C	B1C	BR1C	C1C	CR1C	D1C	DR1C	E1C	ER1C	59' - 8"	59' - 2¾"	5' - 1½"
A1D	B1D	BR1D	C1D	CR1D	D1D	DR1D	E1D	ER1D	59' - 5"	58' - 11¾"	4' - 10½"
A1E	B1E	BR1E	C1E	CR1E	D1E	DR1E	E1E	ER1E	59' - 3"	58' - 9¾"	4' - 8½"
A1F	B1F	BR1F	C1F	CR1F	D1F	DR1F	E1F	ER1F	59' - 2"	58' - 8¾"	4' - 7½"
A1G	B1G	BR1G	C1G	CR1G	D1G	DR1G	E1G	ER1G	58' - 11"	58' - 5¾"	4' - 4½"
A1H	B1H	BR1H	C1H	CR1H	D1H	DR1H	E1H	ER1H	58' - 8"	58' - 2¾"	4' - 1½"
A1J	B1J	BR1J	C1J	CR1J	D1J	DR1J	E1J	ER1J	58' - 7"	58' - 1¾"	4' - 0½"
A1K	B1K	BR1K	C1K	CR1K	D1K	DR1K	E1K	ER1K	58' - 6"	58' - 0¾"	3' - 11½"
A1M	B1M	BR1M	C1M	CR1M	D1M	DR1M	E1M	ER1M	58' - 3"	57' - 9¾"	3' - 8½"
A1N	B1N	BR1N	C1N	CR1N	D1N	DR1N	E1N	ER1N	57' - 9"	57' - 3¾"	3' - 2½"
A1P	B1P	BR1P	C1P	CR1P	D1P	DR1P	E1P	ER1P	57' - 7"	57' - 1¾"	3' - 0½"

LICENSED PROFESSIONAL ENGINEER
LESLIE E. ROBERTSON
No. 34360
UNIVERSITY OF THE STATE OF NEW YORK

SKILLING - HELLE - CHRISTIANSEN - ROBERTSON Structural & Civil Engineers

PROJECT THE WORLD TRADE CENTER | TITLE FLOOR PANEL A2 | DATE 8-1-68

REVISIONS

10-4-68

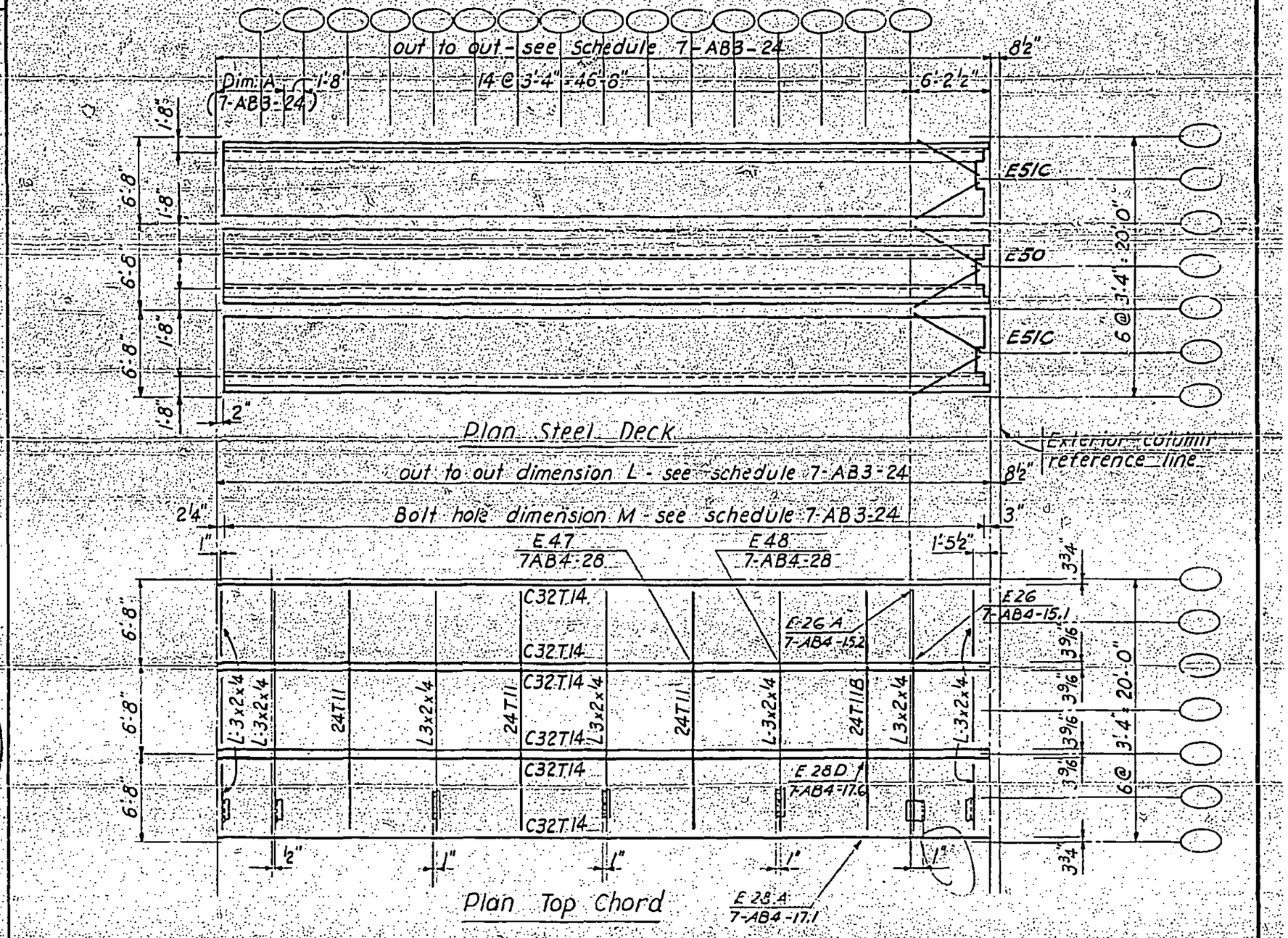

LICENSED PROFESSIONAL ENGINEER LESLIE E. ROBERTSON No. 54350 UNIVERSITY OF

7-AB3-25

SKILLING - HELLE - CHRISTIANSEN - ROBERTSON Structural & Civil Engineers

PROJECT THE WORLD TRADE CENTER | TITLE FLOOR PANEL B2 - B7 | DATE 8-1-68

REVISIONS

10-4-68

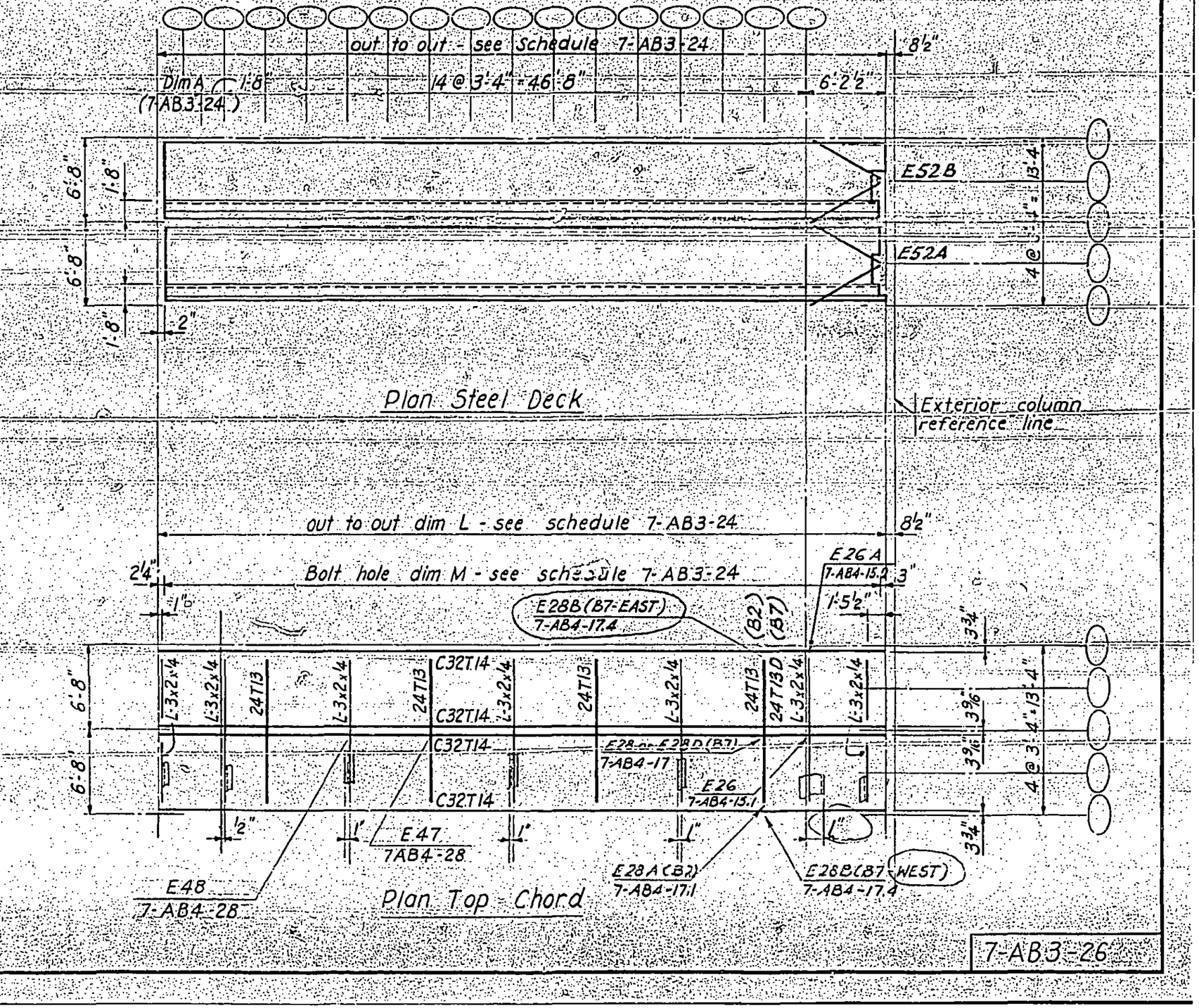

LICENSED PROFESSIONAL ENGINEER
LESLIE E. ROBERTSON
NO. 34360
UNIVERSITY OF THE STATE OF NEW YORK

7-AB3-26

SKILLING - HELLE - CHRISTIANSEN - ROBERTSON — Structural & Civil Engineers

PROJECT THE WORLD TRADE CENTER | TITLE FLOOR PANEL BR 2 & BR7 | DATE 8-1-68

REVISIONS

10-4-68

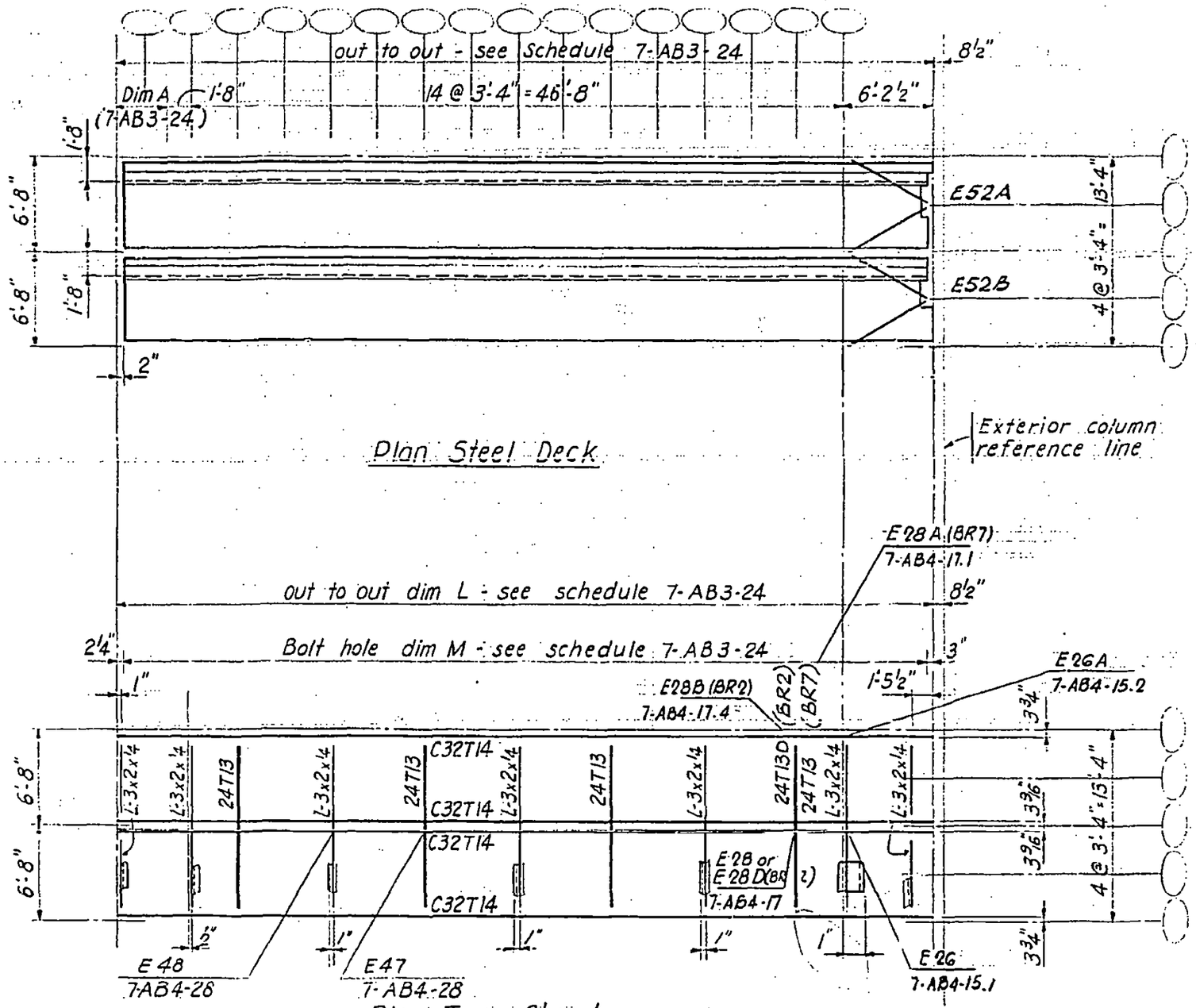

7-AB3-27

LICENSED PROFESSIONAL ENGINEER
LESLIE E. ROBERTSON
No. 34360
UNIVERSITY OF THE STATE OF NEW YORK

SKILLING – HELLE – CHRISTIANSEN – ROBERTSON — Structural & Civil Engineers

PROJECT THE WORLD TRADE CENTER | TITLE FLOOR PANEL C2 | DATE 8-1-68

REVISIONS

10-4-68

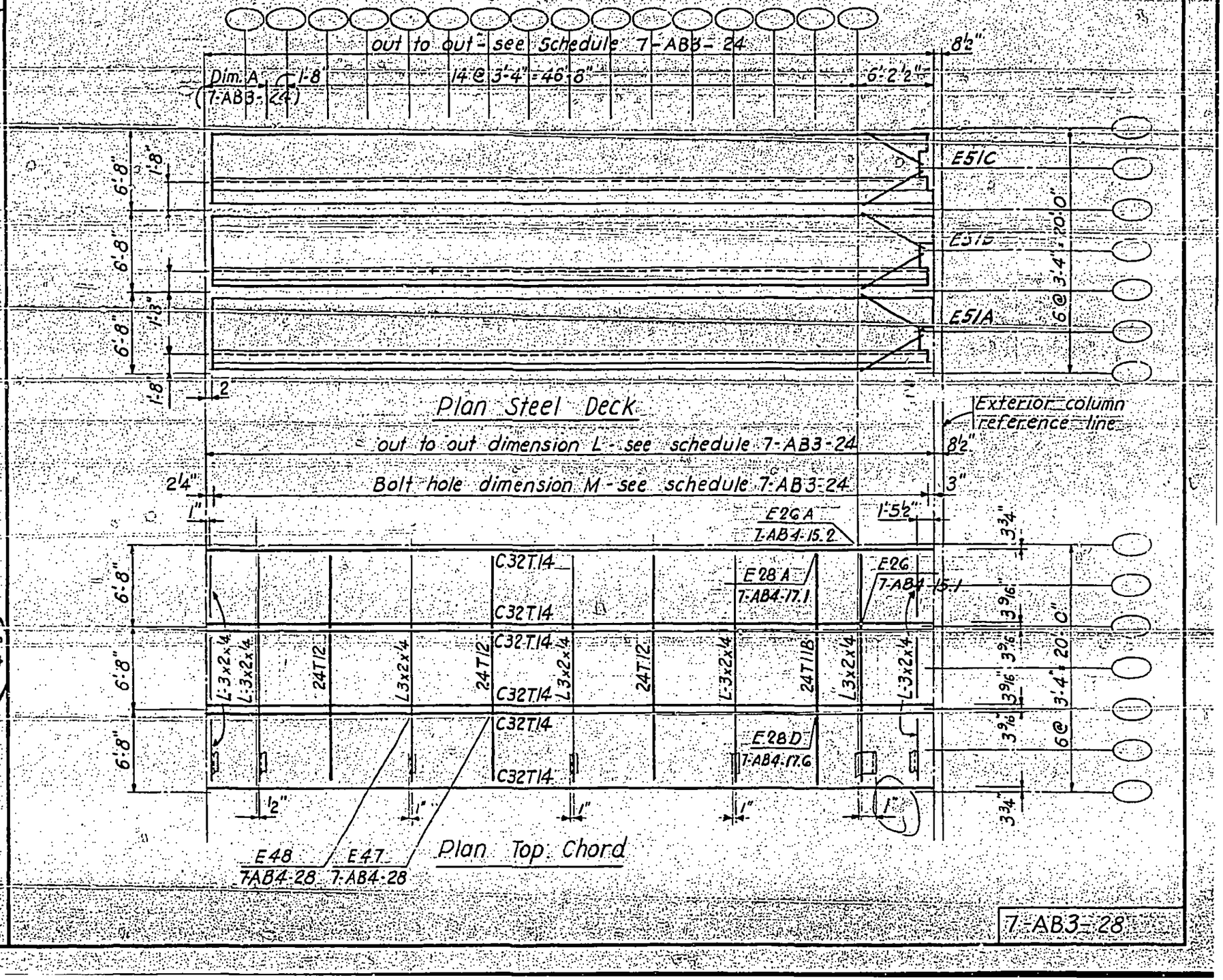

LESLIE E. ROBERT LICENSED PROFESSIONAL ENGINEER No. 34360 OF THE STATE OF NEW YORK

7-AB3-28

SKILLING - HELLE - CHRISTIANSEN - ROBERTSON — Structural & Civil Engineers

PROJECT THE WORLD TRADE CENTER | TITLE FLOOR PANEL CR2 | DATE 8-1-68

REVISIONS

10-4-68

out to out - see schedule 7-AB3-24

Dim A - 1.0" (7-AB3-24)

14 @ 3'-4" = 46'-8"

8½"

6-2½"

1'-8"

6'-8"

6'-8"

6'-8"

1'-8"

E51A

E51B

E51C

6 @ 3'-4" = 20'-0"

2"

Plan Steel Deck

Exterior column reference line

out to out dimension L - see schedule 7-AB3-24

8½"

2¼"

Bolt hole dimension M - see schedule 7-AB3-24

3"

1"

E26A 7-AB4-15.2

1'-5½"

3¾"

C32T14

C32T14

E28A 7-AB4-17.1

E26 7-AB4-15.1

3⅜"

3⅜"

3⅜"

6'-8"

6'-8"

6'-8"

L 3x2x¼

L 3x2x¼

24T12

L 3x2x¼

24T12

C32T14

C32T14

C32T14

C32T14

L 3x2x¼

24T12

L 3x2x¼

24T11B

L 3x2x¼

L 3x2x¼

6 @ 3'-4" = 20'-0"

E28D 7-AB4-17.6

½"

1"

1"

1"

1"

3¾"

E48 7-AB4-28

E47 7-AB4-28

Plan Top Chord

LICENSED PROFESSIONAL ENGINEER — LESLIE E. ROBERTSON — No. 34360 — STATE OF NEW YORK

7-AB3-29

SKILLING - HELLE - CHRISTIANSEN - ROBERTSON — Structural & Civil Engineers

PROJECT THE WORLD TRADE CENTER | TITLE FLOOR PANEL D2 & D7 | DATE 8-15-68

REVISIONS

10-4-68

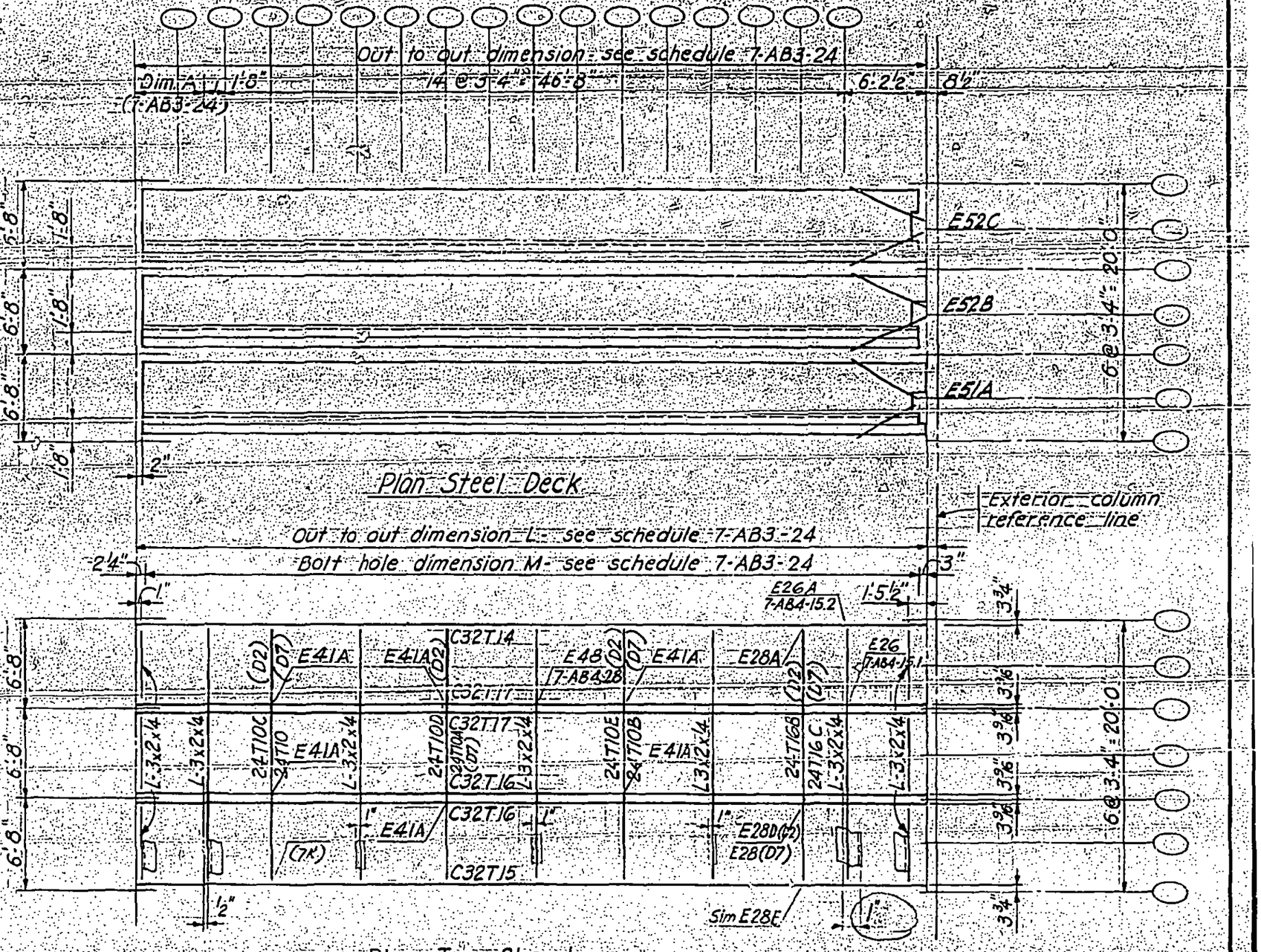

LICENSED PROFESSIONAL ENGINEER — LESLIE E. ROBERTSON — No. 34360 — UNIVERSITY OF THE STATE OF NEW YORK

7-AB3-30

SKILLING - HELLE - CHRISTIANSEN - ROBERTSON Structural & Civil Engineers

PROJECT THE WORLD TRADE CENTER | TITLE FLOOR PANEL DR2 & DR7 | DATE 8-15-68

REVISIONS
10-4-68

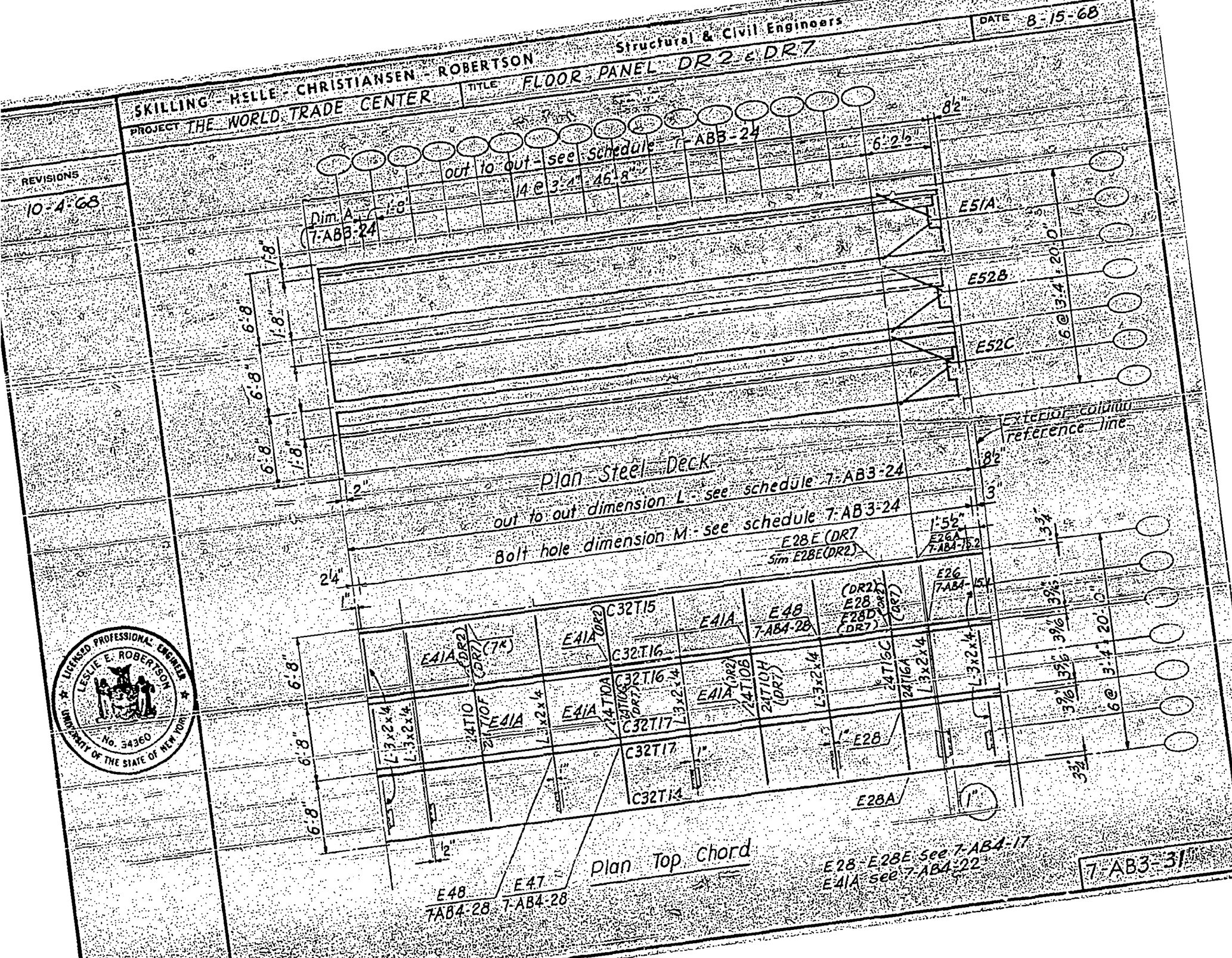

LICENSED PROFESSIONAL ENGINEER
LESLIE E. ROBERTSON
No. 34360
UNIVERSITY OF THE STATE OF NEW YORK

SKILLING - HELLE - CHRISTIANSEN - ROBERTSON — Structural & Civil Engineers

PROJECT: THE WORLD TRADE CENTER | TITLE: FLOOR PANEL E2 | DATE: 8-15-68

REVISIONS

10-4-68

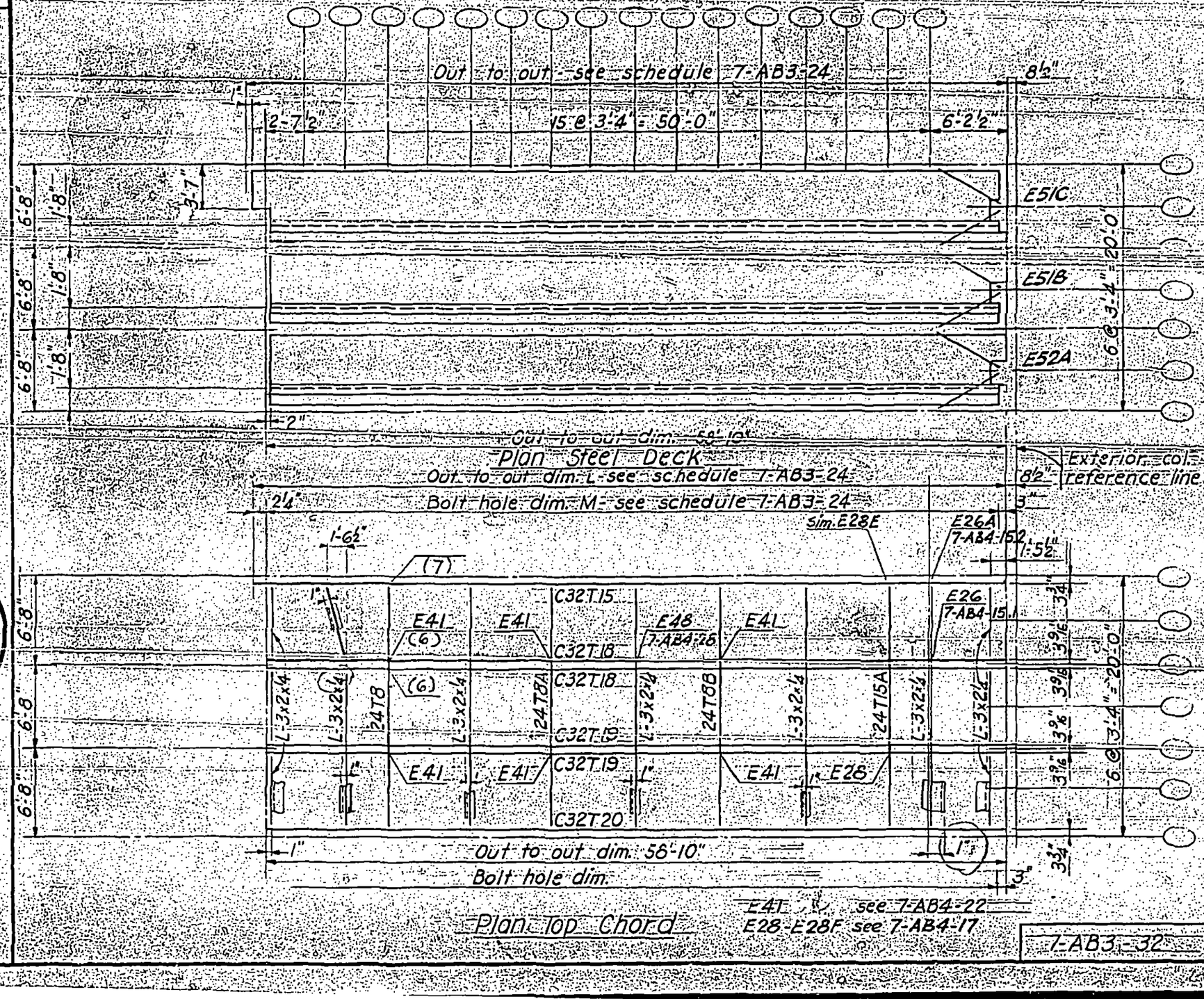

LICENSED PROFESSIONAL ENGINEER — LESLIE E. ROBERTSON — No. 34360 — STATE OF NEW YORK

7-AB3-32

SKILLING - HELLE - CHRISTIANSEN - ROBERTSON Structural & Civil Engineers

PROJECT THE WORLD TRADE CENTER | TITLE FLOOR PANEL ER2 | DATE 8-15-68

REVISIONS

10-4-68

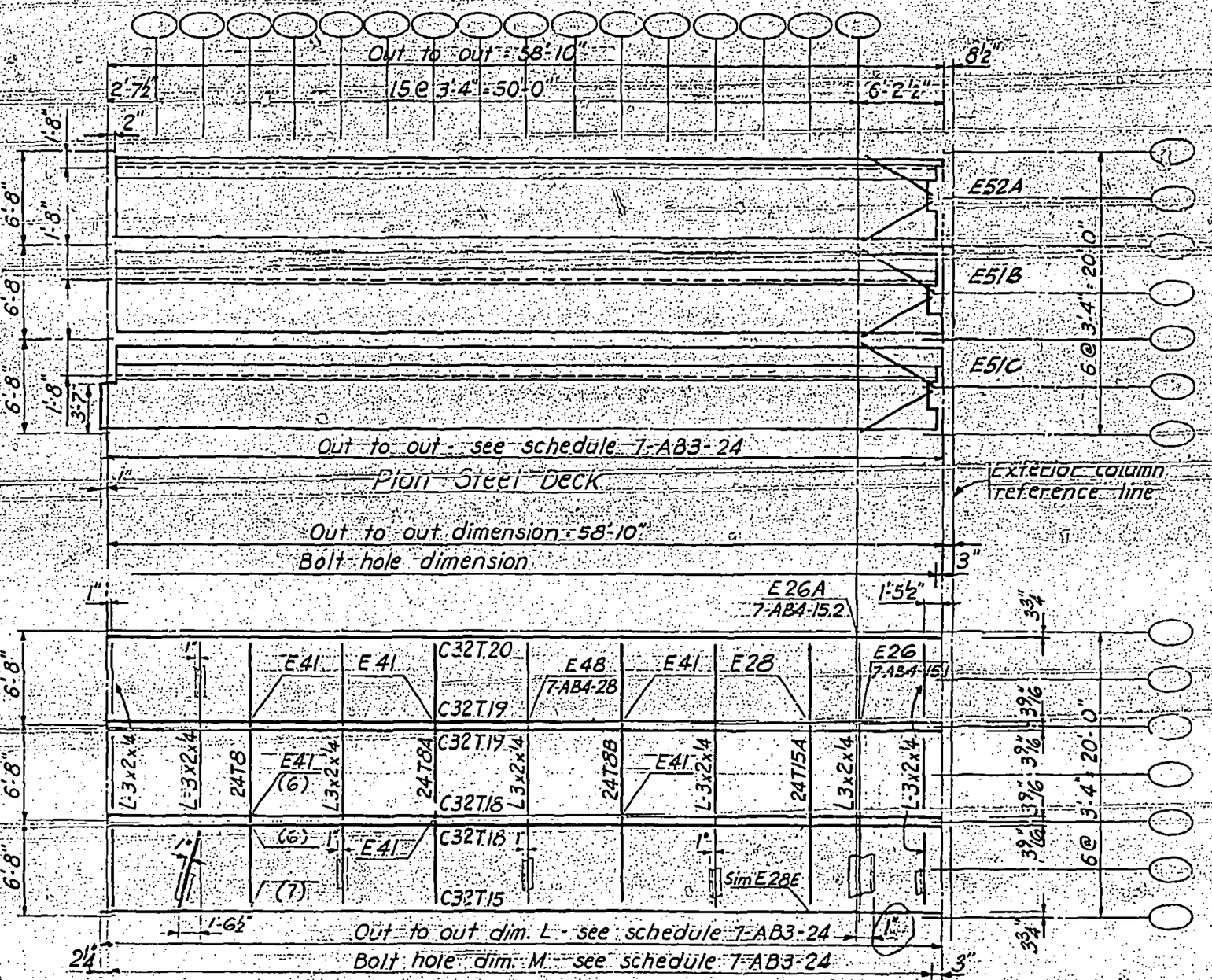

LICENSED PROFESSIONAL ENGINEER — LESLIE E. ROBERTSON — No. 34360 — STATE OF NEW YORK

7-AB3-33

SKILLING - HELLE - CHRISTIANSEN - ROBERTSON Structural & Civil Enginoors

PROJECT THE WORLD TRADE CENTER | TITLE FLOOR PANEL F2 | DATE 8-15-68

REVISIONS

10-4-68

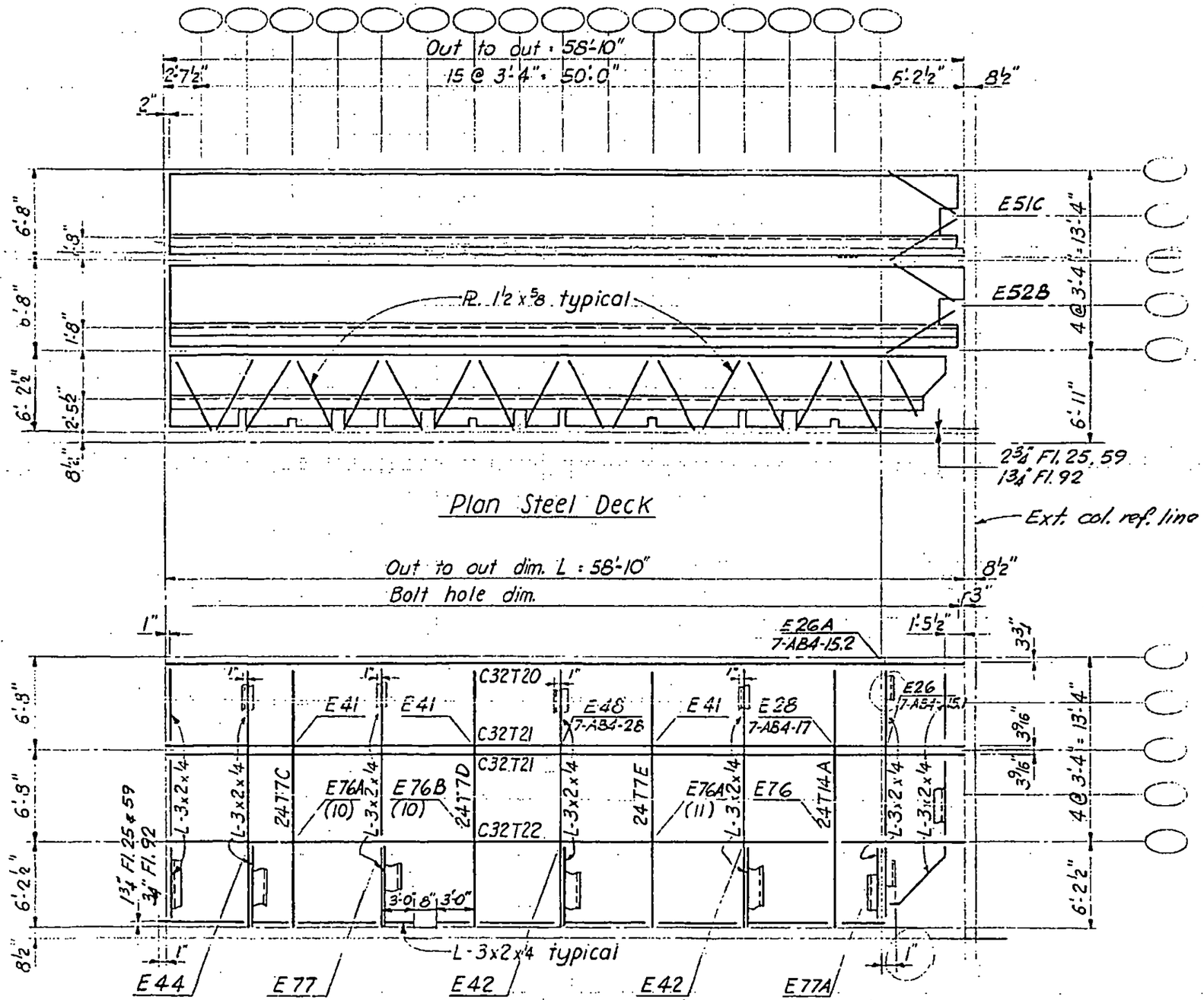

LICENSED PROFESSIONAL ENGINEER
LESLIE E. ROBERTSON
No. 34360
UNIVERSITY OF THE STATE OF NEW YORK

SKILLING - HELLE - CHRISTIANSEN - ROBERTSON Structural & Civil Engineers

PROJECT THE WORLD TRADE CENTER | TITLE FLOOR PANEL FR2 | DATE 8-15-68

REVISIONS

10-4-68

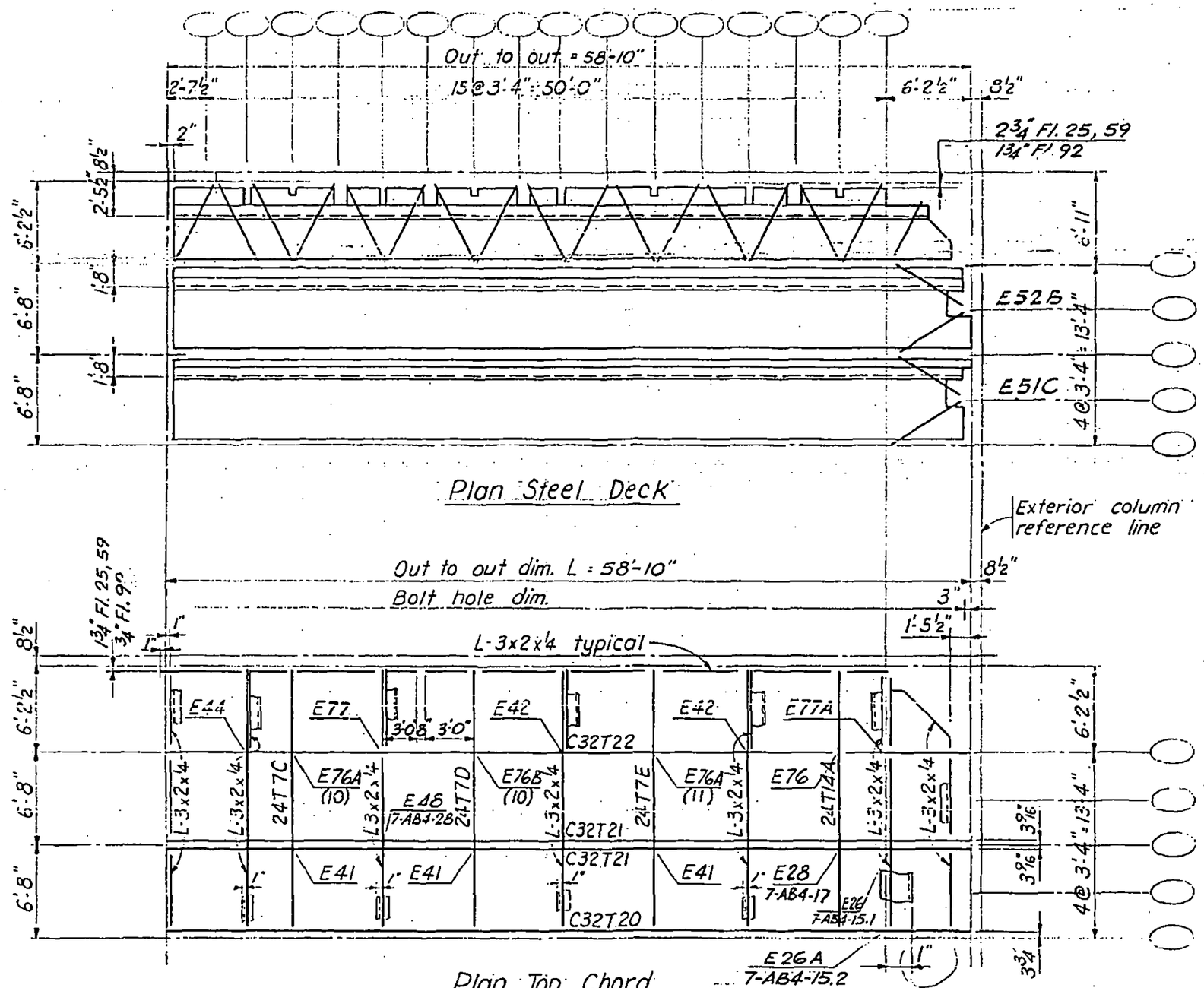

E41 - E44 see 7-AB4-22-25
E76 - E77 see 7-AB4-57-61

7-AB3-35

LICENSED PROFESSIONAL ENGINEER
LESLIE E. ROBERTSON
No. 34360
UNIVERSITY OF THE STATE OF NEW YORK

SKILLING - HELLE - CHRISTIANSEN - ROBERTSON Structural & Civil Engineers

PROJECT THE WORLD TRADE CENTER | TITLE FLOOR PANEL G2 | DATE 8-15-68

REVISIONS

10-4-68

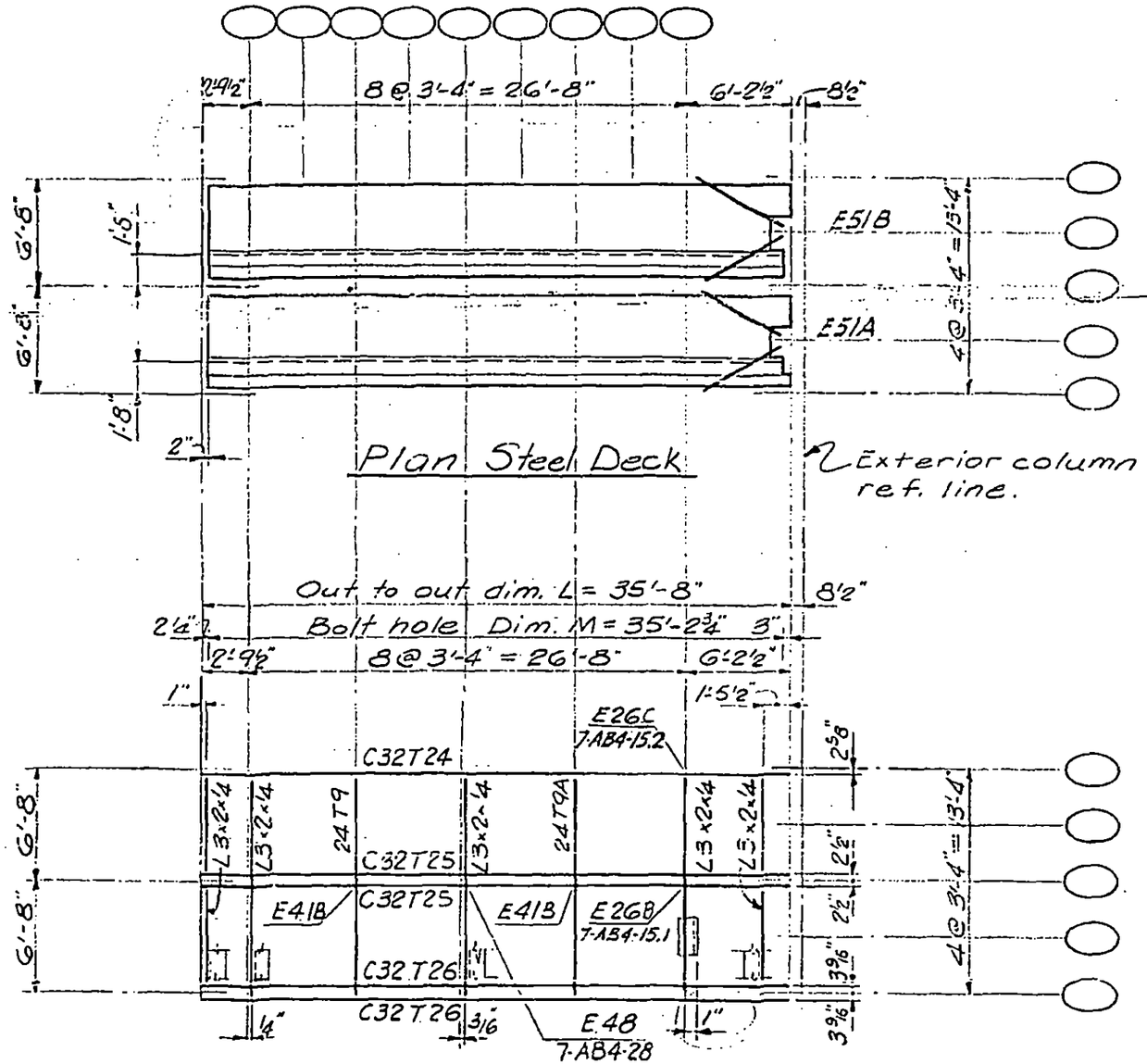

Plan Steel Deck

Plan Top Chord

E41B - see Dwg. 7-AB4-22.1

7-AB3-36

LICENSED PROFESSIONAL ENGINEER
LESLIE E. ROBERTSON
No. 34360
UNIVERSITY OF THE STATE OF NEW YORK

SKILLING - HELLE - CHRISTIANSEN - ROBERTSON — Structural & Civil Engineers

PROJECT: THE WORLD TRADE CENTER | TITLE: FLOOR PANEL 6R2 | DATE: 8-15-68

REVISIONS

10-4-68

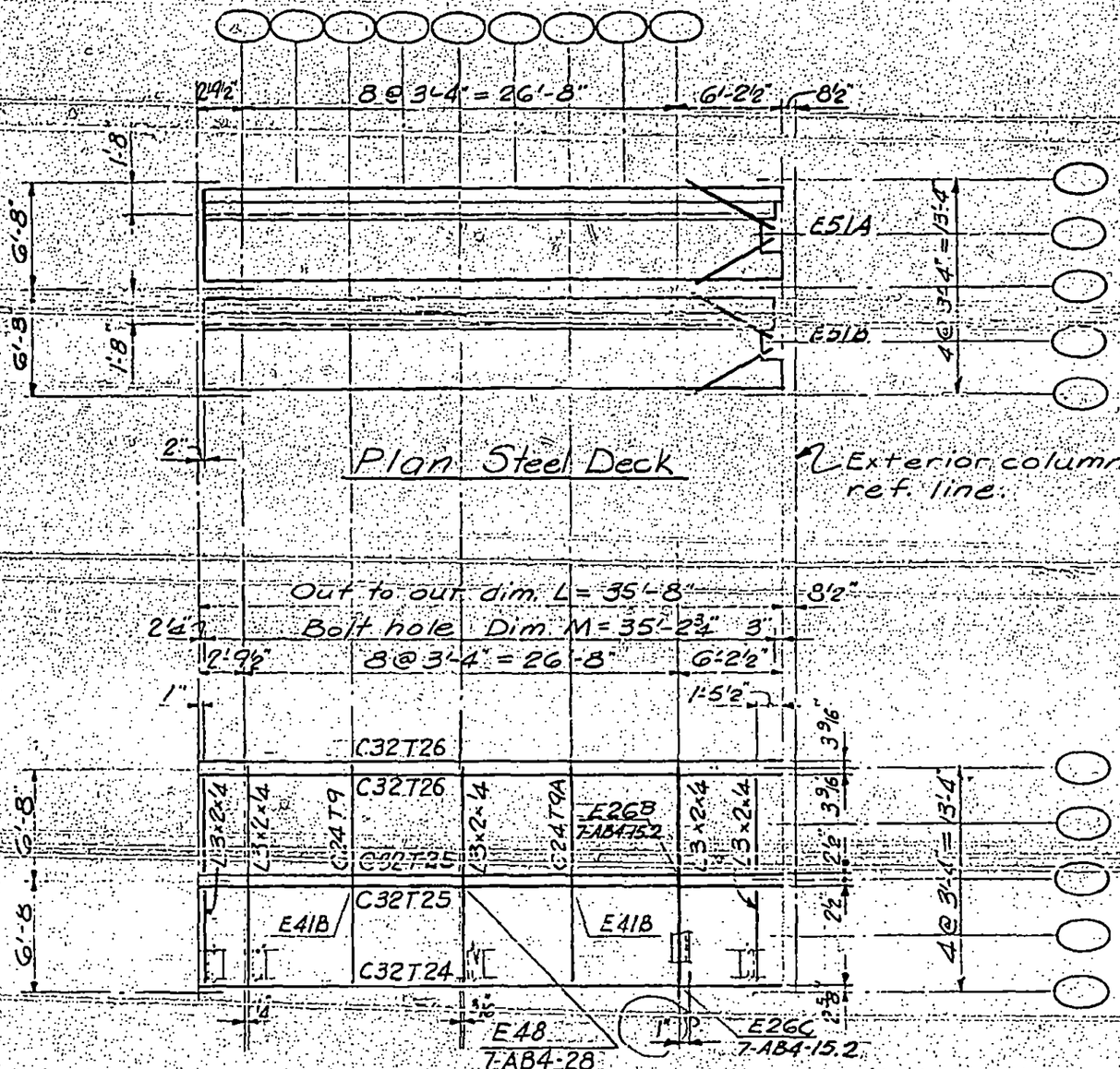

LICENSED PROFESSIONAL ENGINEER — LESLIE E. ROBERTSON — No. 34360 — UNIVERSITY OF THE STATE OF NEW YORK

E41B - see Dwg. 7-AB4-22.1

7-AB3-37

SKILLING - HELLE - CHRISTIANSEN - ROBERTSON Structural & Civil Engineers

PROJECT THE WORLD TRADE CENTER | TITLE FLOOR PANEL H.2 & H.7 | DATE 8-1-68

REVISIONS

8.15.68
10-4-68

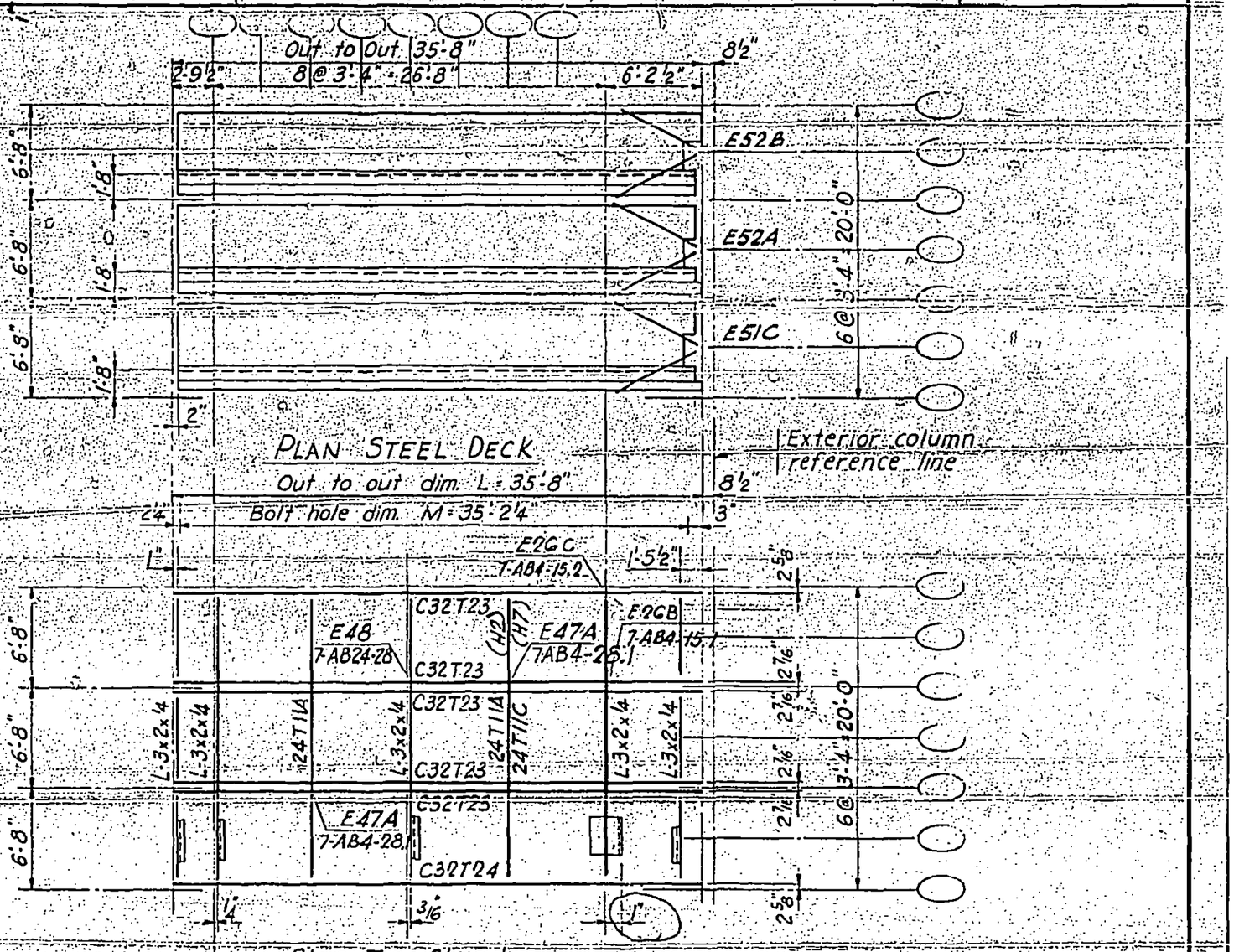

LICENSED PROFESSIONAL ENGINEER
LESLIE E. ROBERTSON
No. 34360
UNIVERSITY OF THE STATE OF NEW YORK

T-AB3-38

SKILLING - HELLE - CHRISTIANSEN - ROBERTSON Structural & Civil Engineers

PROJECT THE WORLD TRADE CENTER | TITLE FLOOR PANEL HR2 & HR7 | DATE 8-1-68

REVISIONS

8-15-68
10-4-68

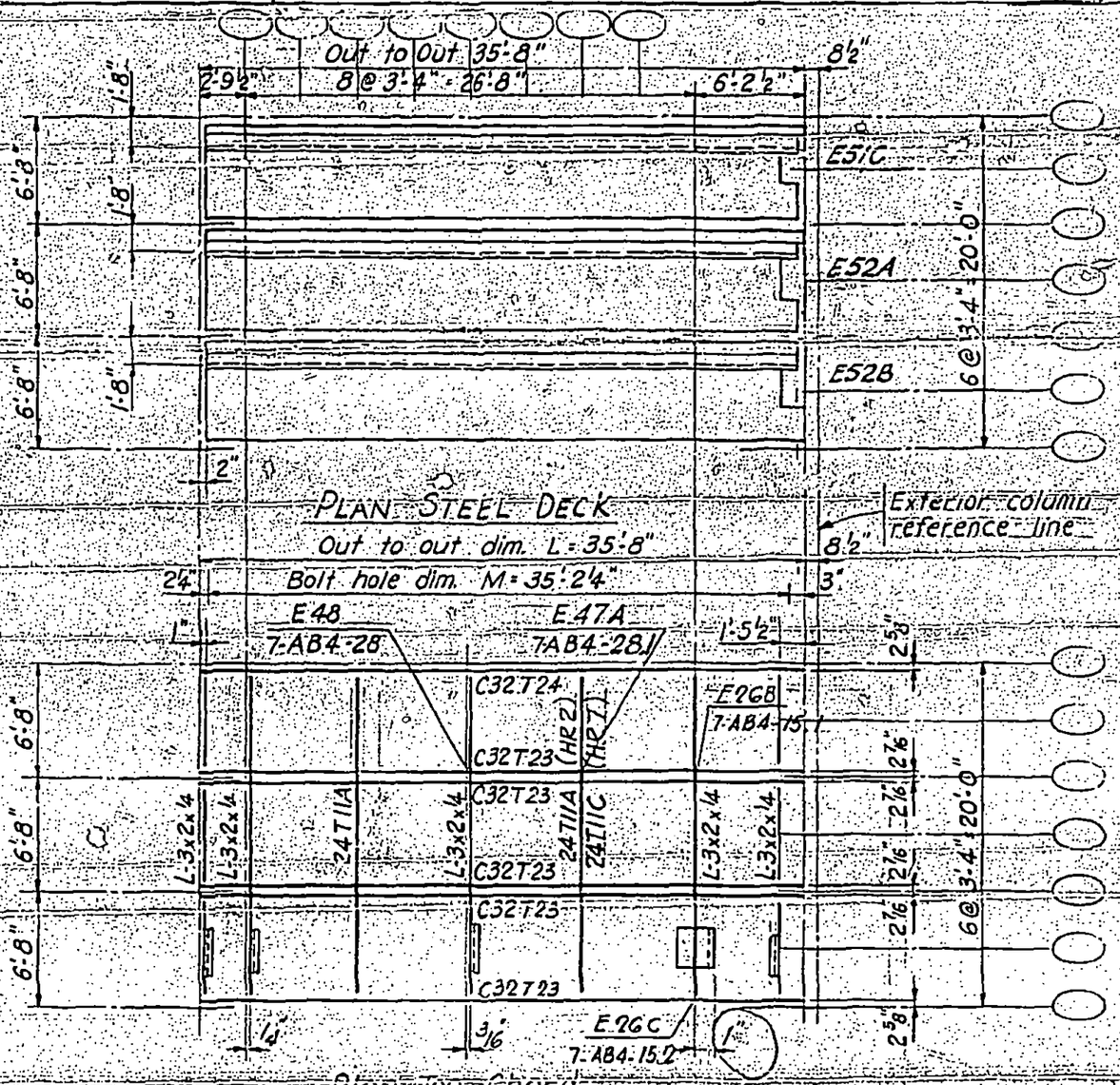

Plan Top Chord

7-AB3-39

SKILLING - HELLE - CHRISTIANSEN - ROBERTSON Structural & Civil Engineers

PROJECT THE WORLD TRADE CENTER | TITLE FLOOR PANEL J2 | DATE 8-1-68

REVISIONS

8-15-68
10-4-68

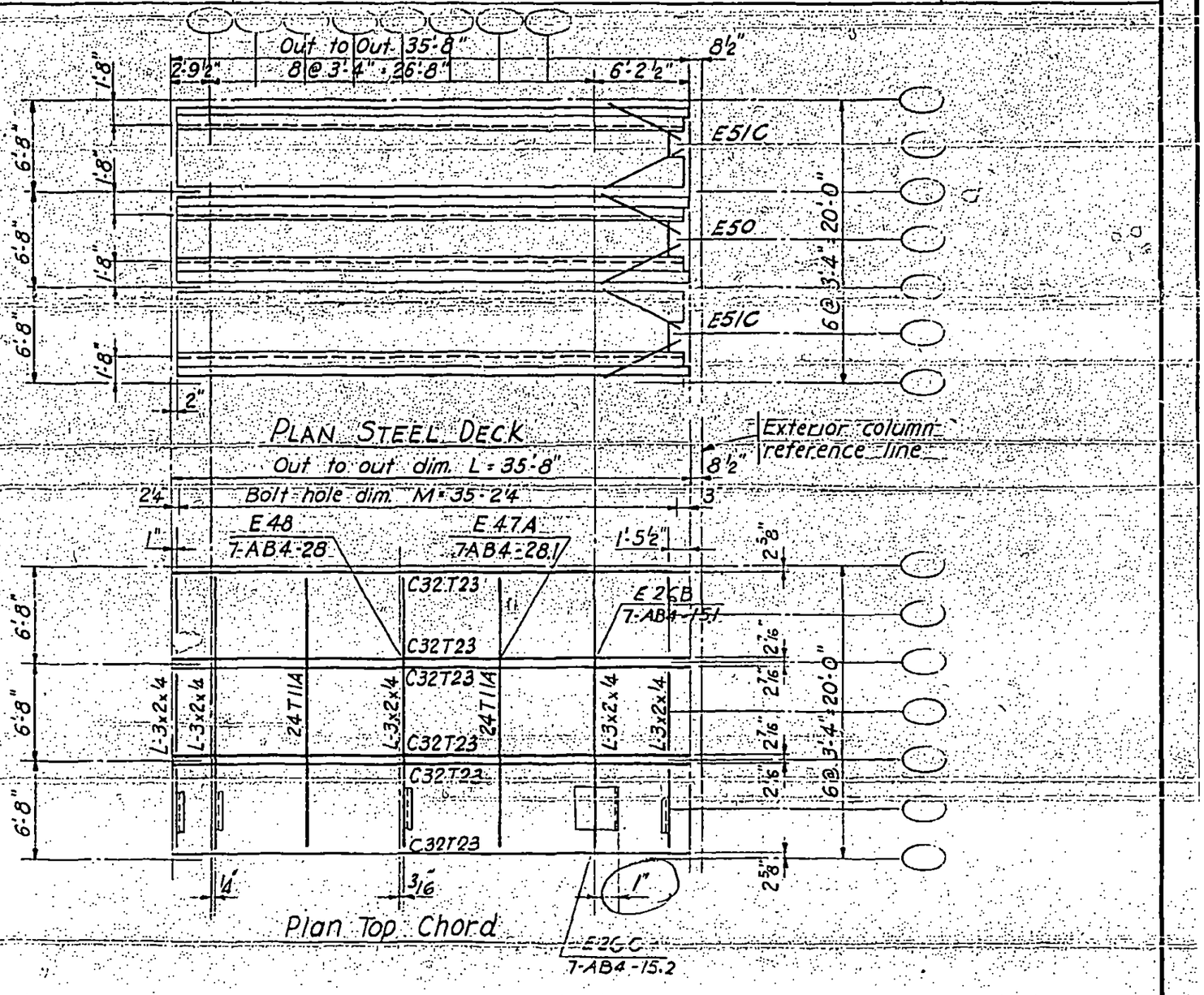

LICENSED PROFESSIONAL ENGINEER
LESLIE E. ROBERTSON
No. 5438-0
UNIVERSITY OF THE STATE OF NEW YORK

7-AB3-40

SKILLING, HELLE, CHRISTIANSEN, ROBERTSON — Structural & Civil Engineers

PROJECT: THE WORLD TRADE CENTER | TITLE: FLOOR PANEL - DIMENSION SCHEDULE 3 | DATE: 1-6-69

REVISIONS

PANEL NO.									OUT TO OUT PANEL DIM. L	BOLT HOLE DIMENSION M	DIMENSION A
A3A	B3A	BR3A	C3A	CR3A	D3A	DR3A	E3A	ER3A	59'-9"	59'-3¾"	5'-2½"
A3B	B3B	BR3B	C3B	CR3B	D3B	DR3B	E3B	ER3B	59'-8½"	59'-3¼"	5'-2"
A3C	B3C	BR3C	C3C	CR3C	D3C	DR3C	E3C	ER3C	59'-8"	59'-2¾"	5'-1½"
A3D	B3D	BR3D	C3D	CR3D	D3D	DR3D	E3D	ER3D	59'-5"	58'-11¾"	4'-10½"
A3E	B3E	BR3E	C3E	CR3E	D3E	DR3E	E3E	ER3E	59'-3"	58'-9¾"	4'-8½"
A3F	B3F	BR3F	C3F	CR3F	D3F	DR3F	E3F	ER3F	59'-2"	58'-8¾"	4'-7½"
A3G	B3G	BR3G	C3G	CR3G	D3G	DR3G	E3G	ER3G	58'-11"	58'-5¾"	4'-4½"
A3H	B3H	BR3H	C3H	CR3H	D3H	DR3H	E3H	ER3H	58'-8"	58'-2¾"	4'-1½"
A3J	B3J	BR3J	C3J	CR3J	D3J	DR3J	E3J	ER3J	58'-7"	58'-1¾"	4'-0½"
A3K	B3K	BR3K	C3K	CR3K	D3K	DR3K	E3K	ER3K	58'-6"	58'-0¾"	3'-11½"
A3M	B3M	BR3M	C3M	CR3M	D3M	DR3M	E3M	ER3M	58'-3"	57'-9¾"	3'-8½"
A3N	B3N	BR3N	C3N	CR3N	D3N	DR3N	E3N	ER3N	57'-9"	57'-3¾"	3'-2½"
A3P	B3P	BR3P	C3P	CR3P	D3P	DR3P	E3P	ER3P	57'-7"	57'-1¾"	3'-0½"

LICENSED PROFESSIONAL ENGINEER
LESLIE E. ROBERTSON
No. 34360
UNIVERSITY OF THE STATE OF NEW YORK

DESIGNED

DRAWN

REVIEWED

25

7-AB3-41

SKILLING - HELLE - CHRISTIANSEN - ROBERTSON Structural & Civil Engineers

PROJECT THE WORLD TRADE CENTER | TITLE FLOOR PANEL A3 | DATE 1-6-69

REVISIONS

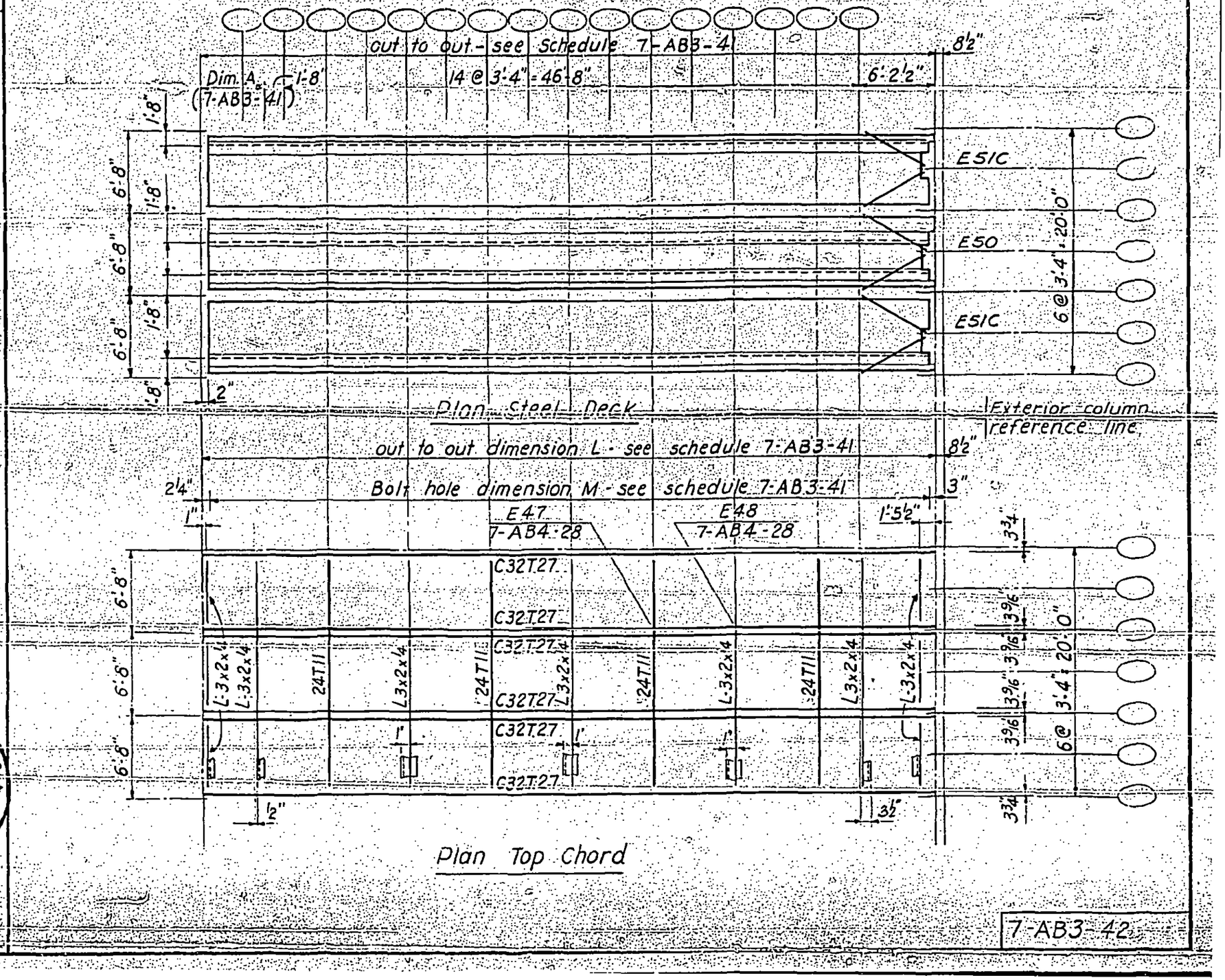

LICENSED PROFESSIONAL ENGINEER
LESLIE E. ROBERTSON
No. 34360
UNIVERSITY OF THE STATE OF NEW YORK

7-AB3-42

SKILLING - HELLE - CHRISTIANSEN - ROBERTSON Structural & Civil Engineers

PROJECT THE WORLD TRADE CENTER | TITLE FLOOR PANEL B3 | DATE 1-6-69

REVISIONS

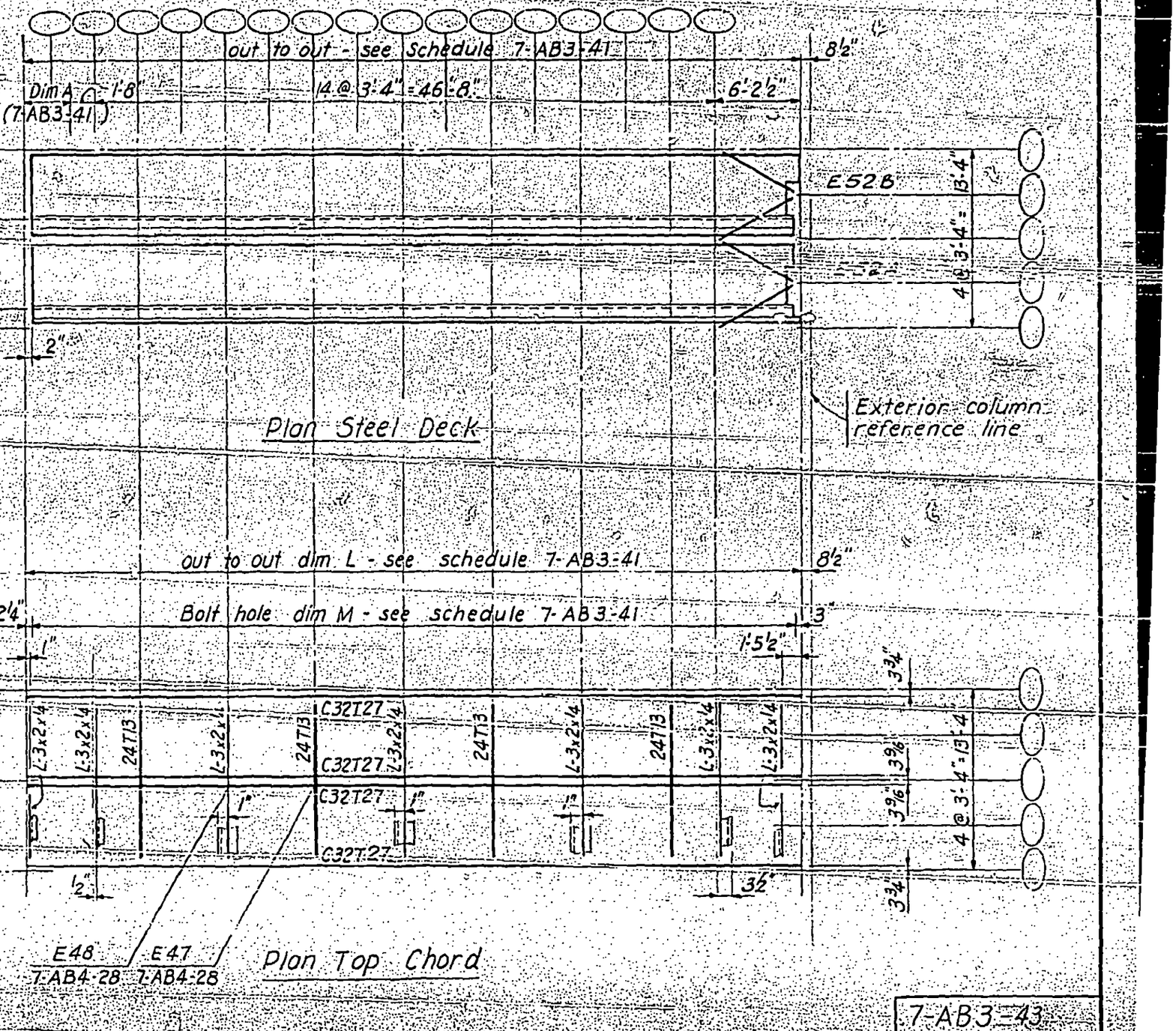

LICENSED PROFESSIONAL ENGINEER
LESLIE E. ROBERTSON
No. 34360
UNIVERSITY OF THE STATE OF NEW YORK

7-AB3-43

SKILLING - HELLE - CHRISTIANSEN - ROBERTSON Structural & Civil Engineers

PROJECT THE WORLD TRADE CENTER | TITLE FLOOR PANEL BR3 | DATE 1-6-69

REVISIONS

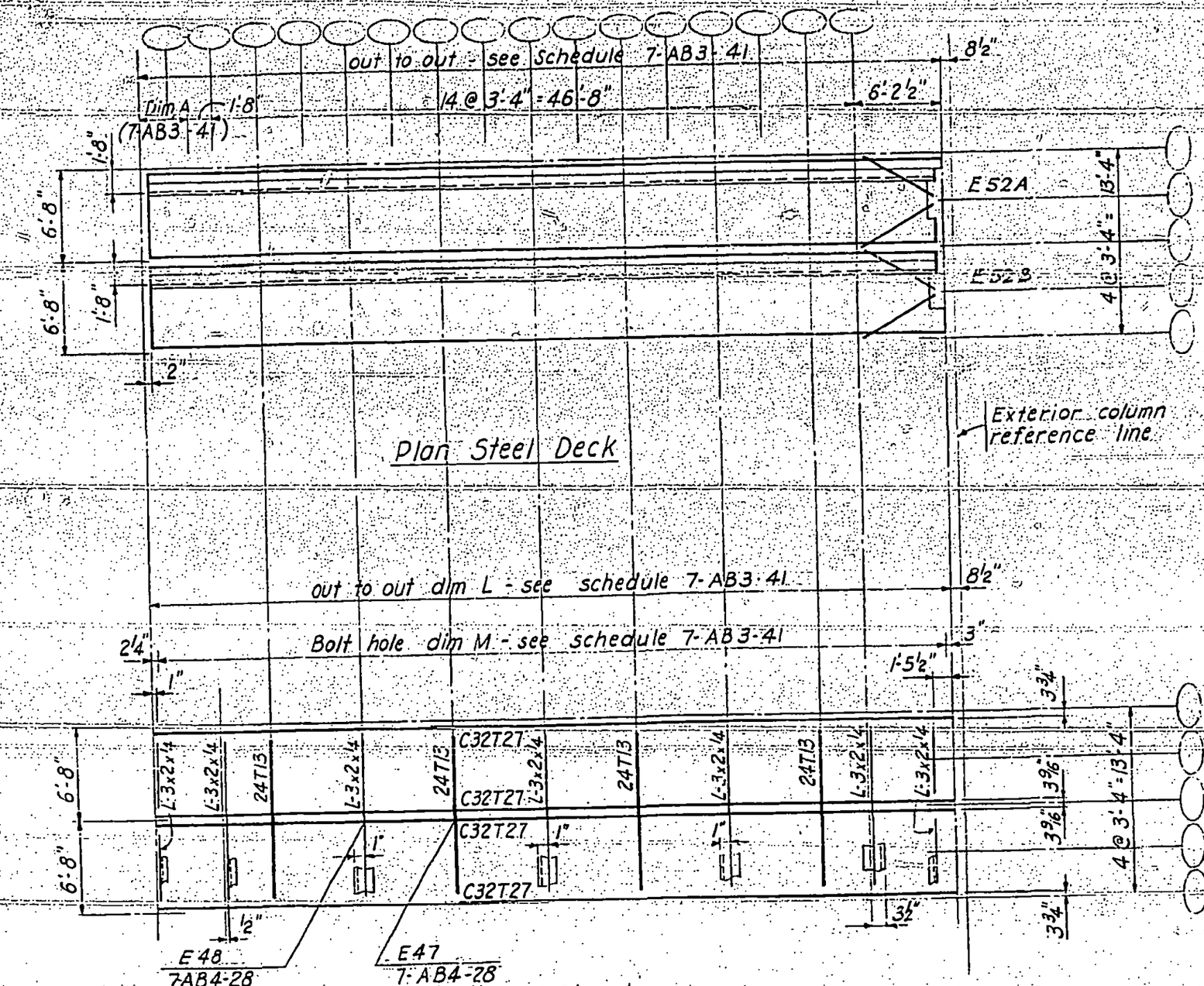

LICENSED PROFESSIONAL ENGINEER LESLIE E. ROBERTSON No. 34360 UNIVERSITY OF THE STATE OF NEW YORK

7-AB3-44

SKILLING - HELLE - CHRISTIANSEN - ROBERTSON Structural & Civil Engineers

PROJECT THE WORLD TRADE CENTER | TITLE FLOOR PANEL A-3 | 1-6-69

REVISIONS

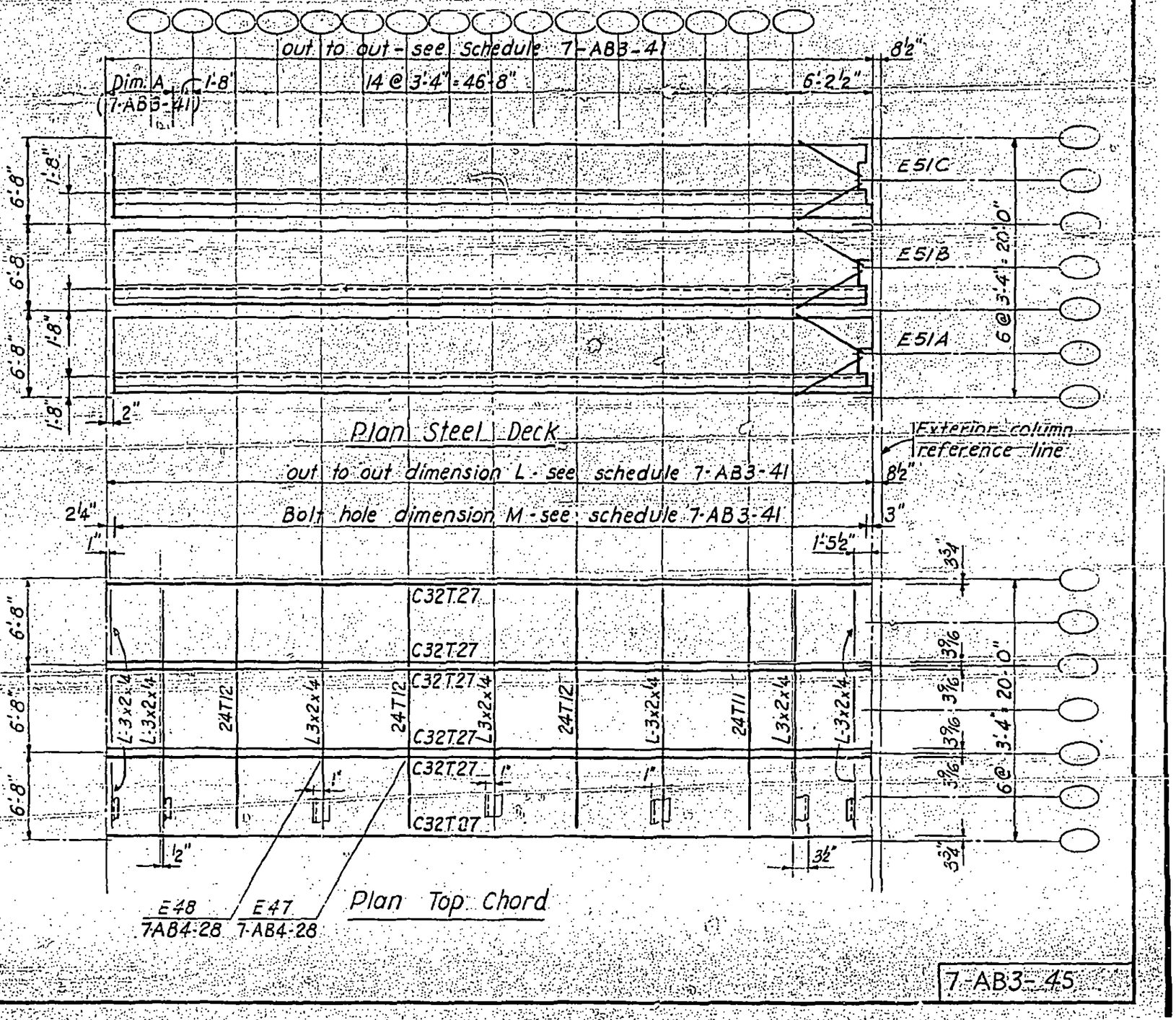

LICENSED PROFESSIONAL ENGINEER
LESLIE E. ROBERTSON
No. 34360
UNIVERSITY OF THE STATE OF NEW YORK

7-AB3-45

SKILLING - HELLE - CHRISTIANSEN - ROBERTSON Structural & Civil Engineers

PROJECT THE WORLD TRADE CENTER | TITLE FLOOR PANEL GRID

1-6-69

REVISIONS

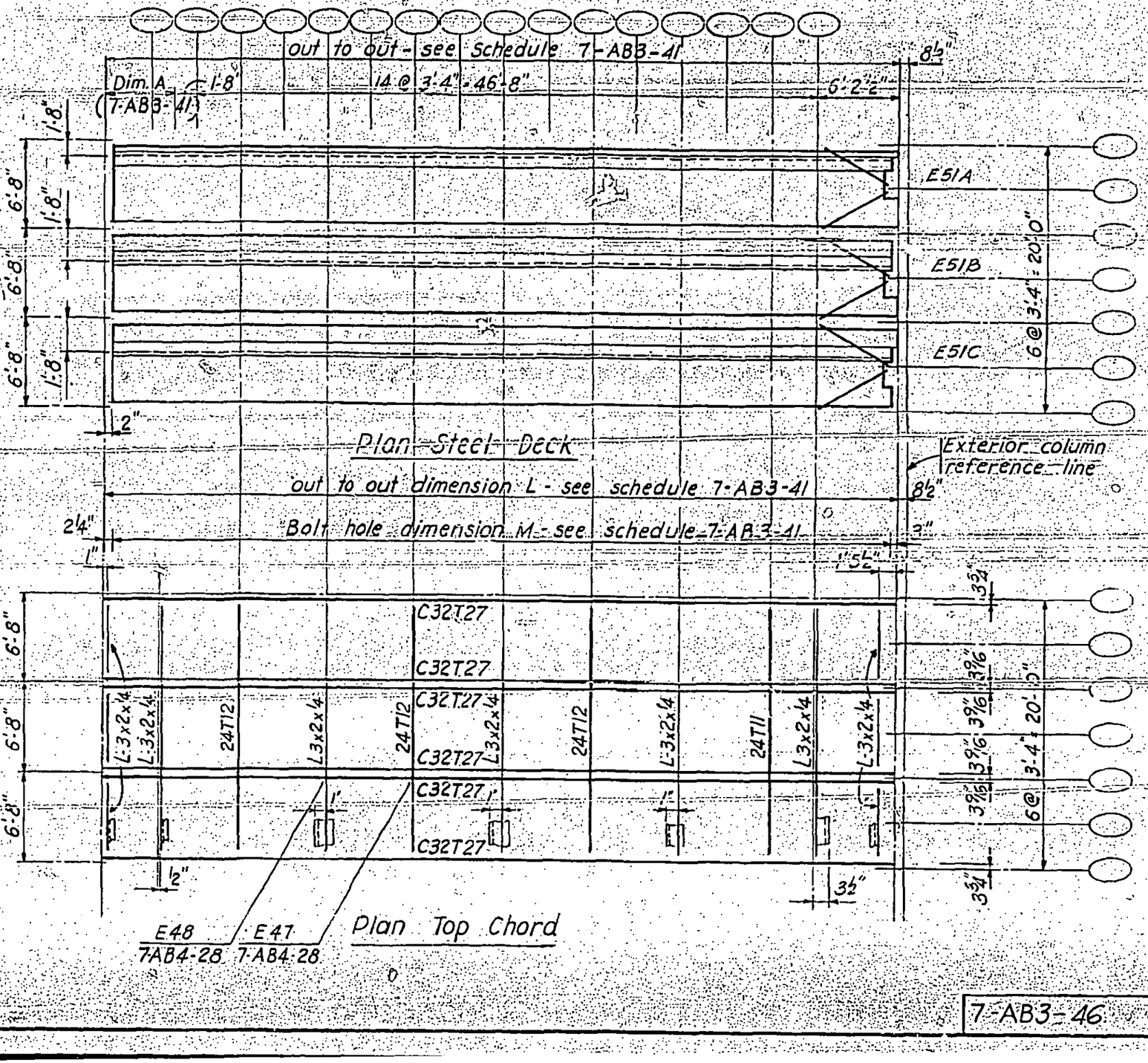

LICENSED PROFESSIONAL ENGINEER
LESLIE E. ROBERTSON
No. 34360
UNIVERSITY OF THE STATE OF NEW YORK

7-AB3-46

SKILLING - HELLE - CHRISTIANSEN - ROBERTSON Structural & Civil Engineers

PROJECT THE WORLD TRADE CENTER TITLE FLOOR PANEL D3

DATE

REVISIONS

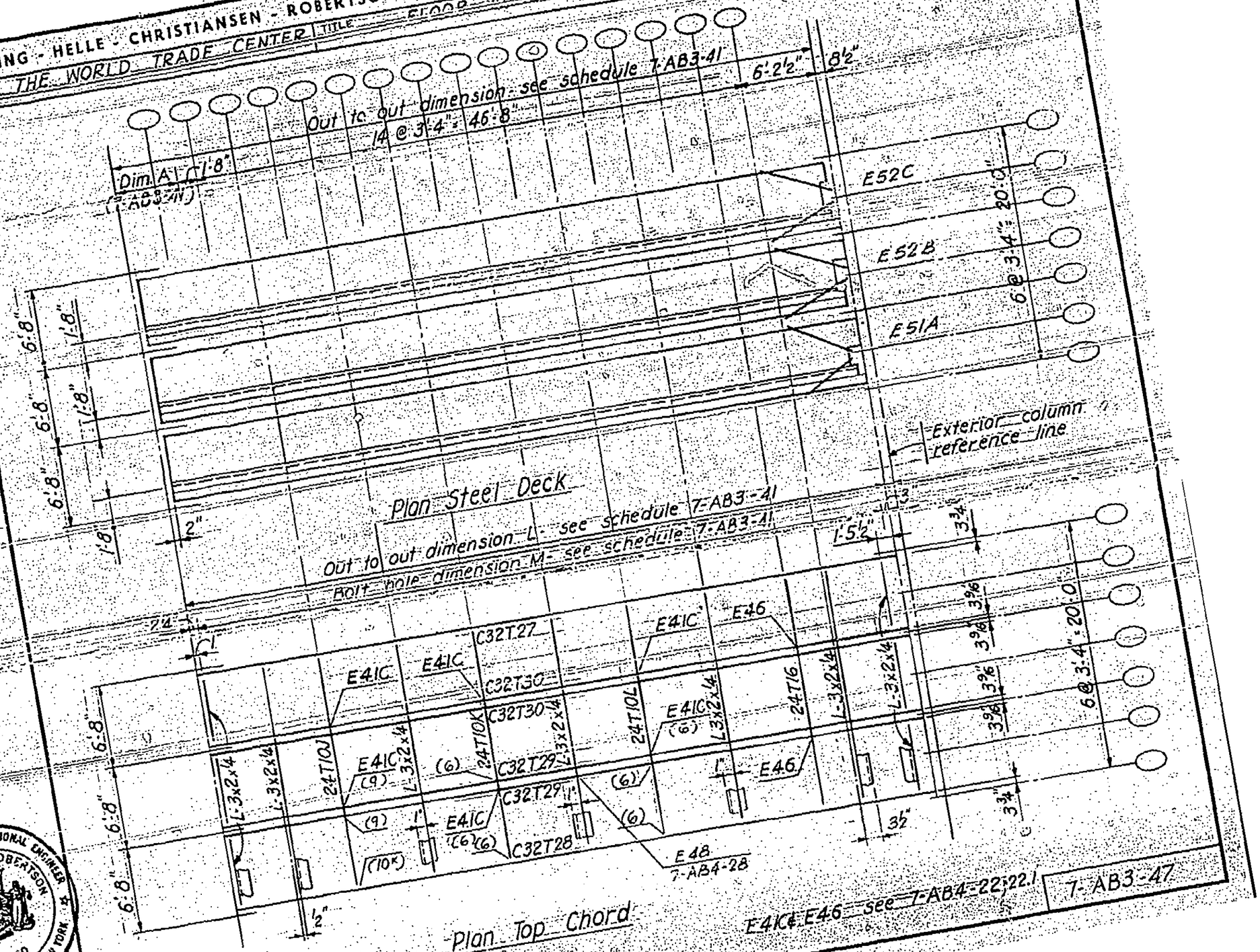

LICENSED PROFESSIONAL ENGINEER
LESLIE E. ROBERTSON
No. 34360
UNIVERSITY OF THE STATE OF NEW YORK

SKILLING - HELLE - CHRISTIANSEN - ROBERTSON Structural & Civil Engineers

PROJECT THE WORLD TRADE CENTER | TITLE FLOOR PANELING | DATE 1-6-69

REVISIONS

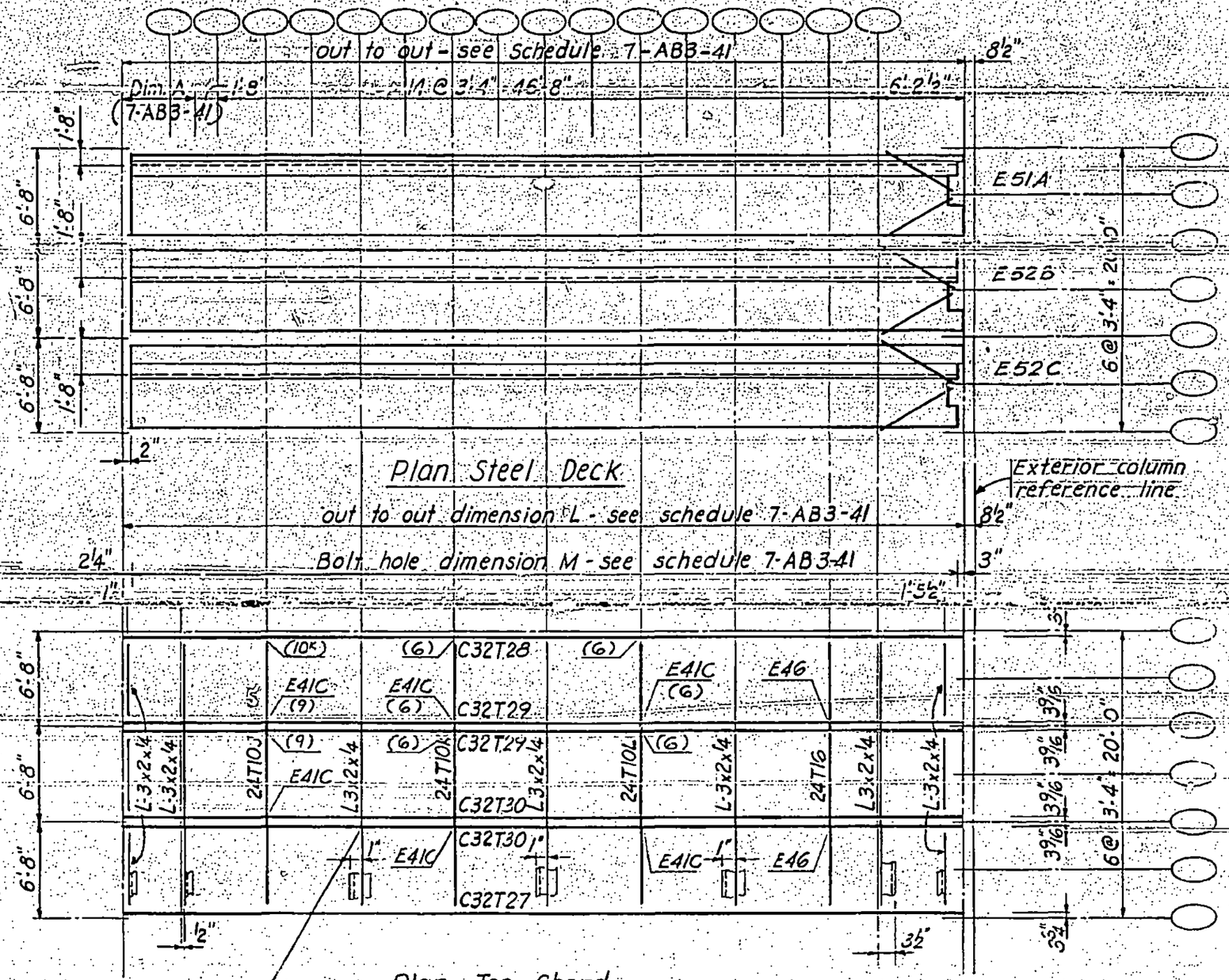

LICENSED PROFESSIONAL ENGINEER
LESLIE E. ROBERTSON
No. 34360
UNIVERSITY OF THE STATE OF NEW YORK

7-AB3-48

SKILLING - HELLE - CHRISTIANSEN - ROBERTSON Structural & Civil Engineers

PROJECT: THE WORLD TRADE CENTER | TITLE: FLOOR PANEL E5 | 1-6-69

REVISIONS

0. to 0. - see sch.

Out to out - see schedule 7-AB3-41

2'-10¼" 15 @ 3'-4" = 50'-0" 6'-2½" 8½"

1" 1" 3'-7" 1'-8" 3'-11"

6'-8" 6'-8" 6'-8" 6'-8" 6'-8"

E51C E51B E52A 6 @ 3'-4" = 20'-0"

2" 0. to 0. = 59'-0¾" 2" Out to out dim. = 59'-0¾"

Plan Steel Deck

Dim L - see sch. Out to out dim. L - see schedule 7-AB3-41

2¼" Dim M - see sch. 2¼" Bolt hole dim. M - see schedule 7-AB3-41

Exterior col. reference line 8½" 3"

1" 1" 1" (10K) E48 7-AB4-28 1'-5½"

C32T28 C32T31 C32T31 C32T32 C32T32 C32T33

E41D (6K) E41D E41D E46 E41D E41D E46

L-3x2x¼ L-3x2x¼ 24T8C L-3x2x¼ 24T8D L-3x2x¼ 24T8E L-3x2x¼ 24T15 L-3x2x¼ L-3x2x¼

3¾" 3⅝" 3⅝" 3⅝" 3⅝" 3¾" 6 @ 3'-4" = 20'-0"

1" 0. to 0. = 59'-0¾" 1" Out to out dim. 59'-0¾" 3½"

2¼" Bolt hole dim. 58'-7½" 3"

E41D & E46 see 7-AB4-22, 22.1

Plan Top Chord

7-AB3-49

LICENSED PROFESSIONAL ENGINEER LESLIE E. ROBERTSON No. 34360 UNIVERSITY OF THE STATE OF NEW YORK

SKILLING - HELLE - CHRISTIANSEN - ROBERTSON Structural & Civil Enginoors

PROJECT THE WORLD TRADE CENTER | FLOOR PANEL E&S | DATE 1-6-67

REVISIONS

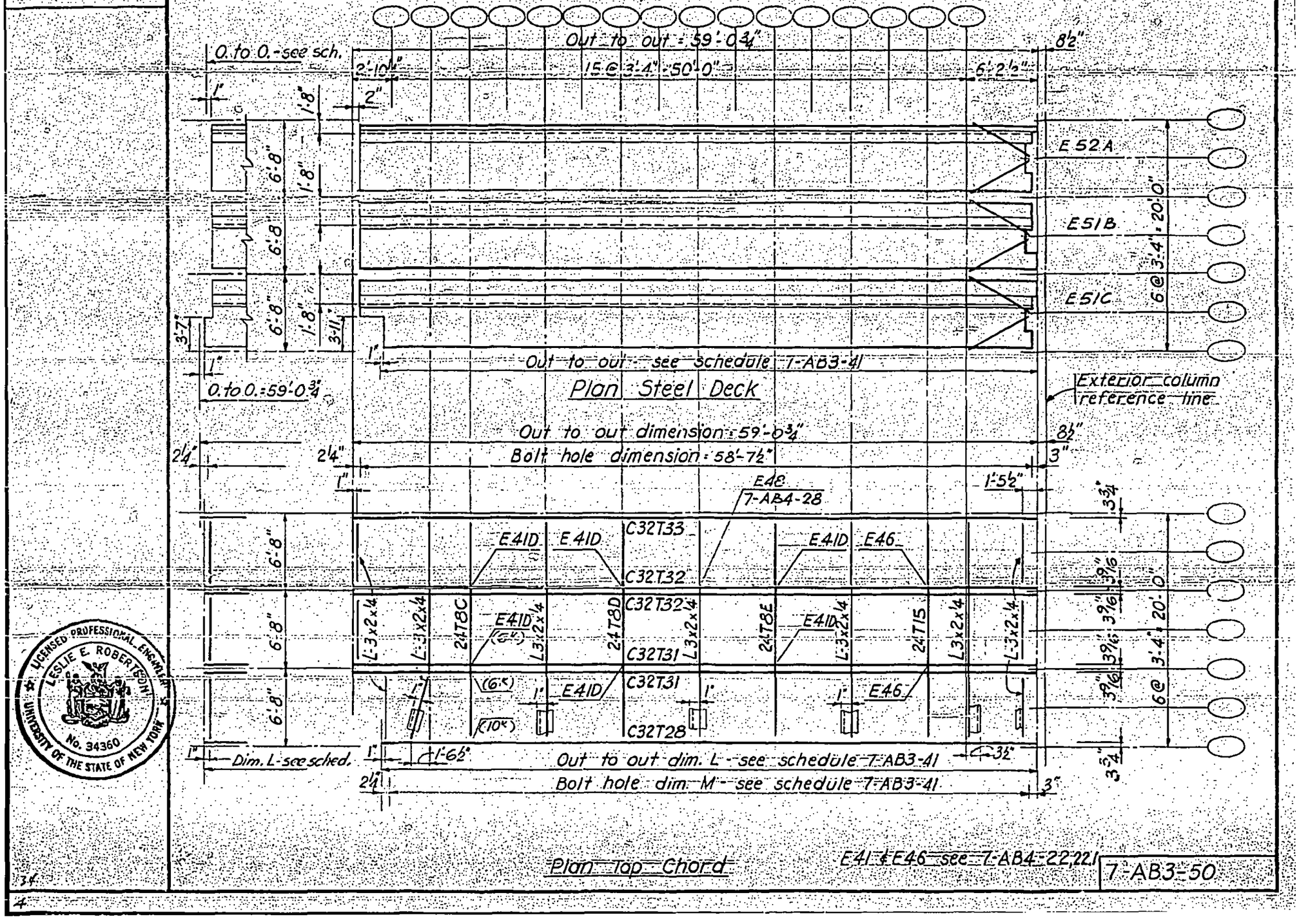

LICENSED PROFESSIONAL ENGINEER
LESLIE E. ROBERTSON
No. 34360
UNIVERSITY OF THE STATE OF NEW YORK

7-AB3-50

34

4

SKILLING - HELLE - CHRISTIANSEN - ROBERTSON Structural & Civil Engineers

PROJECT THE WORLD TRADE CENTER | TITLE FLOOR PANEL E3 | DATE 1-6-67

REVISIONS

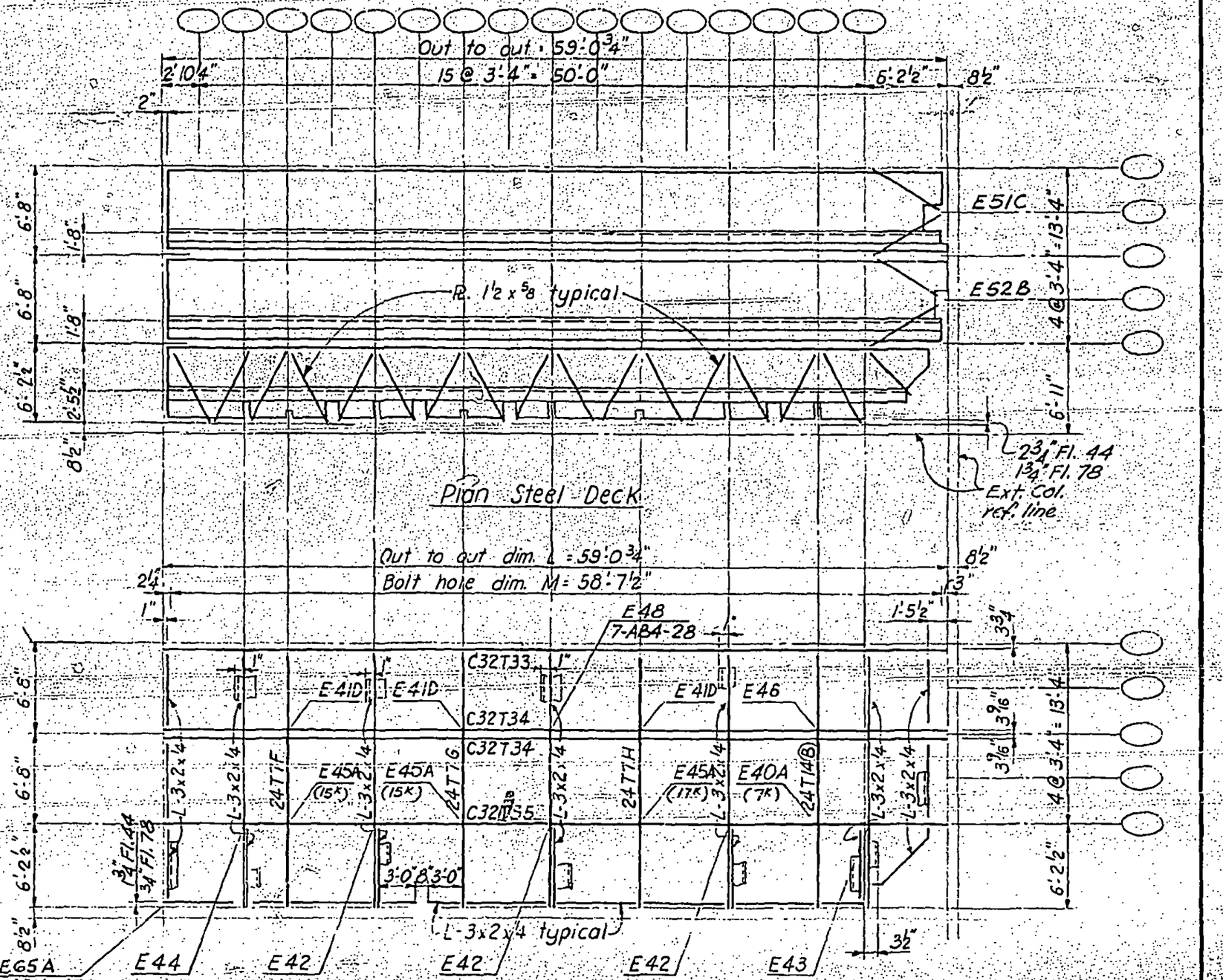

LICENSED PROFESSIONAL ENGINEER
LESLIE E. ROBERTSON
No. 34360
UNIVERSITY OF THE STATE OF NEW YORK

7-AB3-51

SKILLING - HELLE - CHRISTIANSEN - ROBERTSON — Structural & Civil Engineers

PROJECT THE WORLD TRADE CENTER | TITLE FLOOR PANEL FP3 | DATE 1-6-69

REVISIONS:

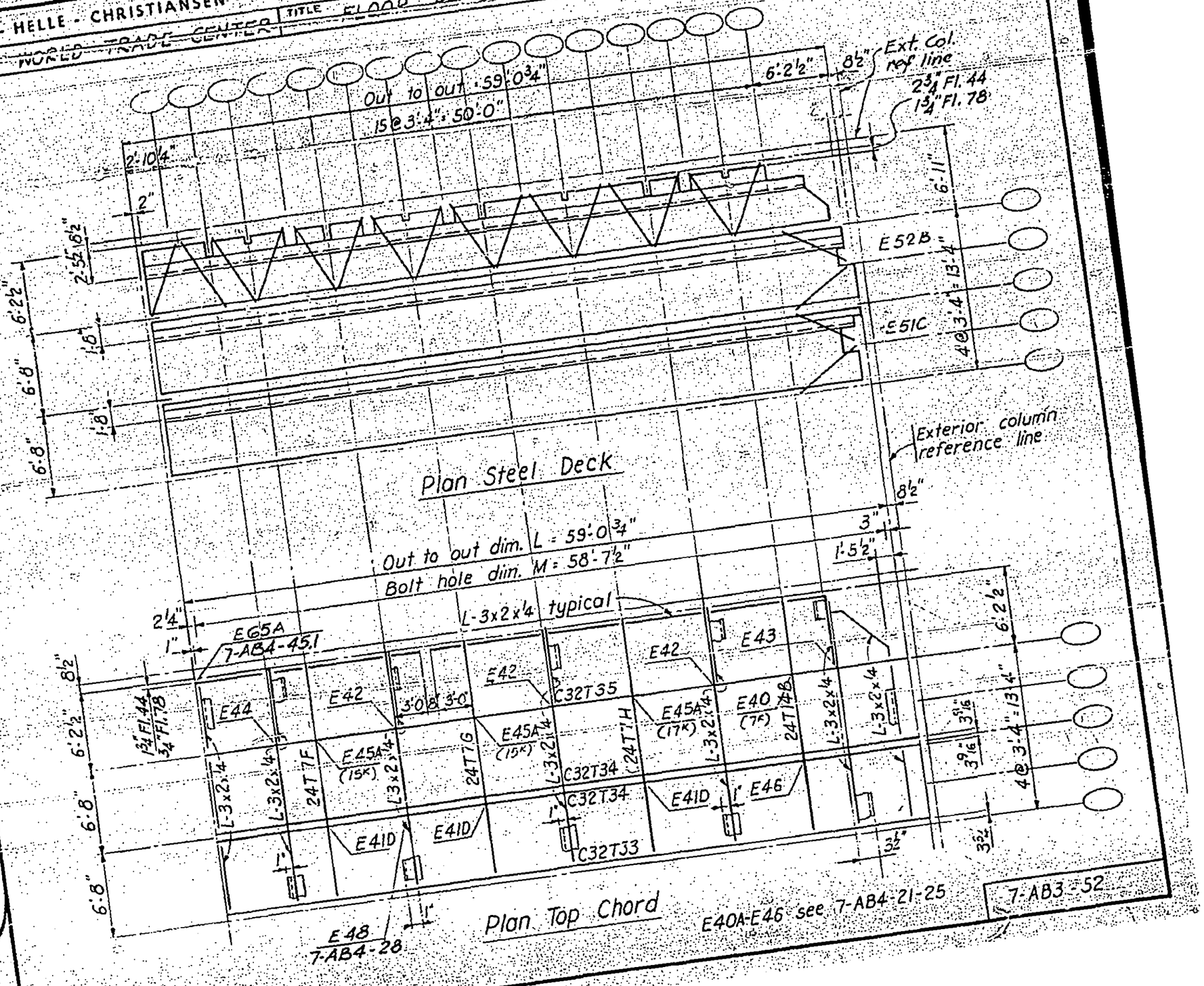

LICENSED PROFESSIONAL ENGINEER
LESLIE E. ROBERTSON
No. 34360
UNIVERSITY OF THE STATE OF NEW YORK

SKILLING, HELLE, CHRISTIANSEN, ROBERTSON — Structural & Civil Engineers

PROJECT: THE WORLD TRADE CENTER | TITLE: FLOOR PANEL A8 | DATE: 1-6-69

REVISIONS

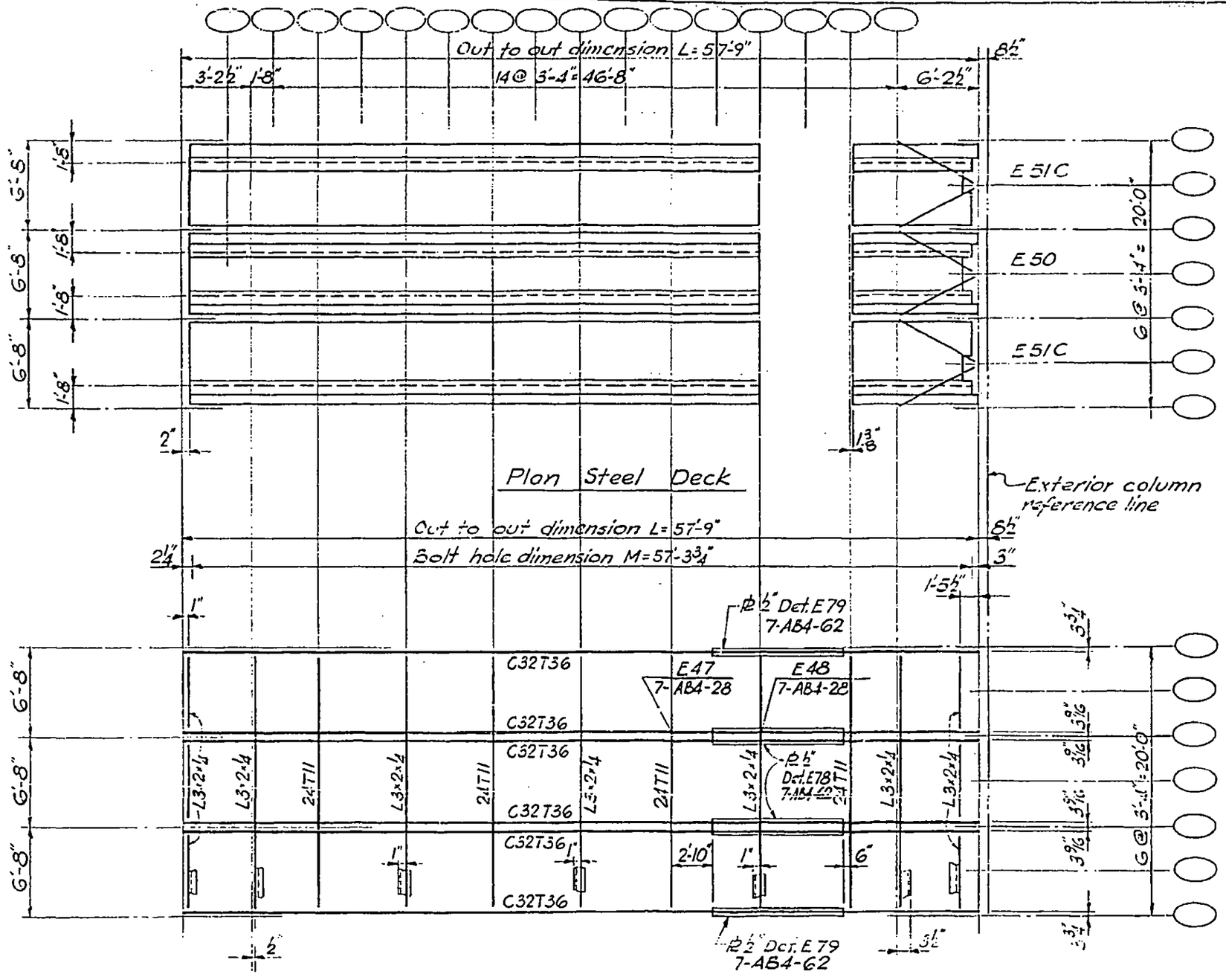

7-AB3-53

LICENSED PROFESSIONAL ENGINEER — LESLIE E. ROBERTSON — No. 34360 — UNIVERSITY OF THE STATE OF NEW YORK

DESIGNED

DRAWN

REVIEWED

SKILLING, HELLE, CHRISTIANSEN, ROBERTSON — Structural & Civil Engineers

PROJECT THE WORLD TRADE CENTER | TITLE FLOOR PANEL B8 | DATE 1-6-69

REVISIONS

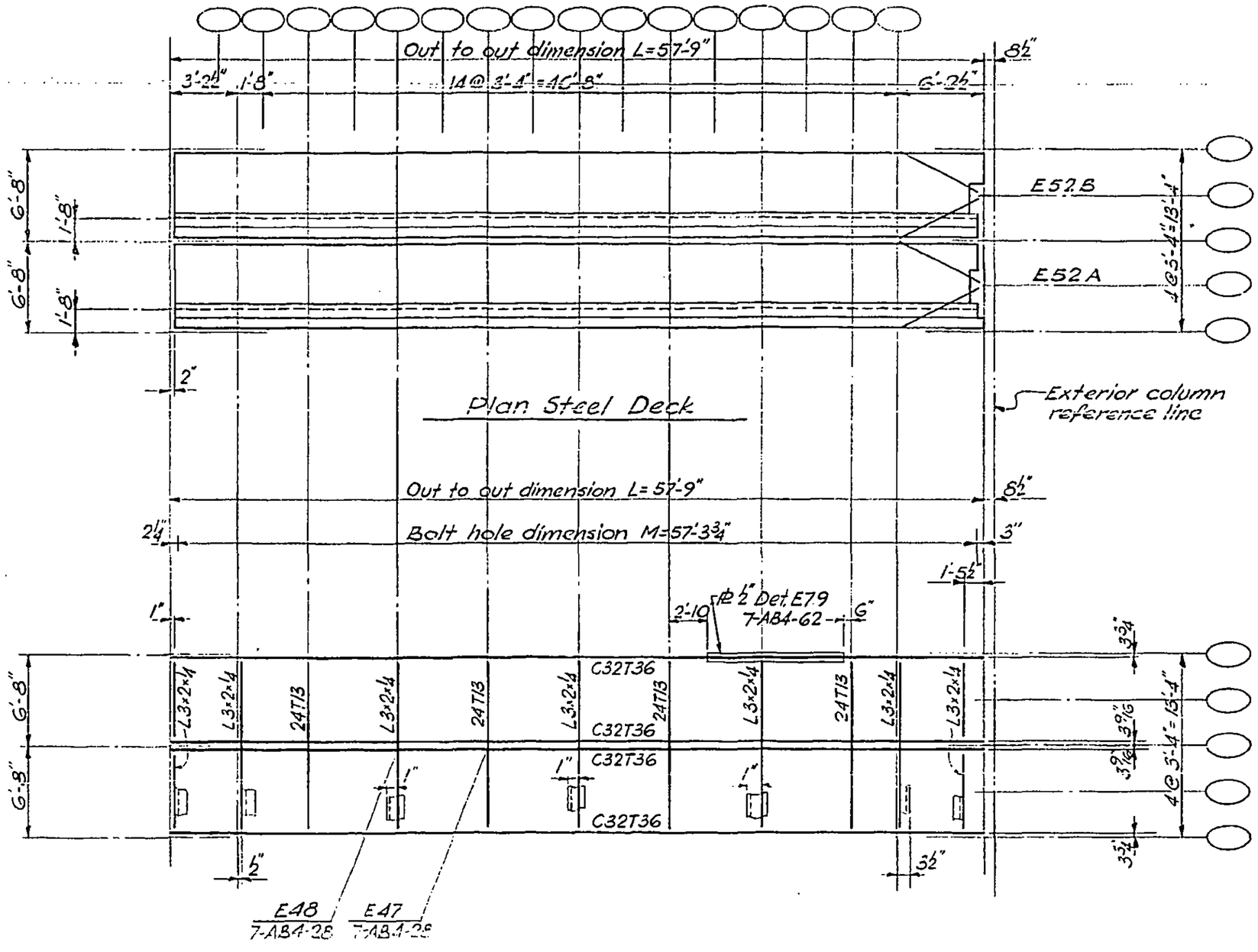

Plan Top Chord

LICENSED PROFESSIONAL ENGINEER — LESLIE E. ROBERTSON — No. 34360 — UNIVERSITY OF THE STATE OF NEW YORK

DESIGNED

DRAWN

REVIEWED

38

7-AB3-54

SKILLING, HELLE, CHRISTIANSEN, ROBERTSON Structural & Civil Engineers

PROJECT THE WORLD TRADE CENTER | TITLE FLOOR PANEL BR8 | DATE 1-6-69

REVISIONS

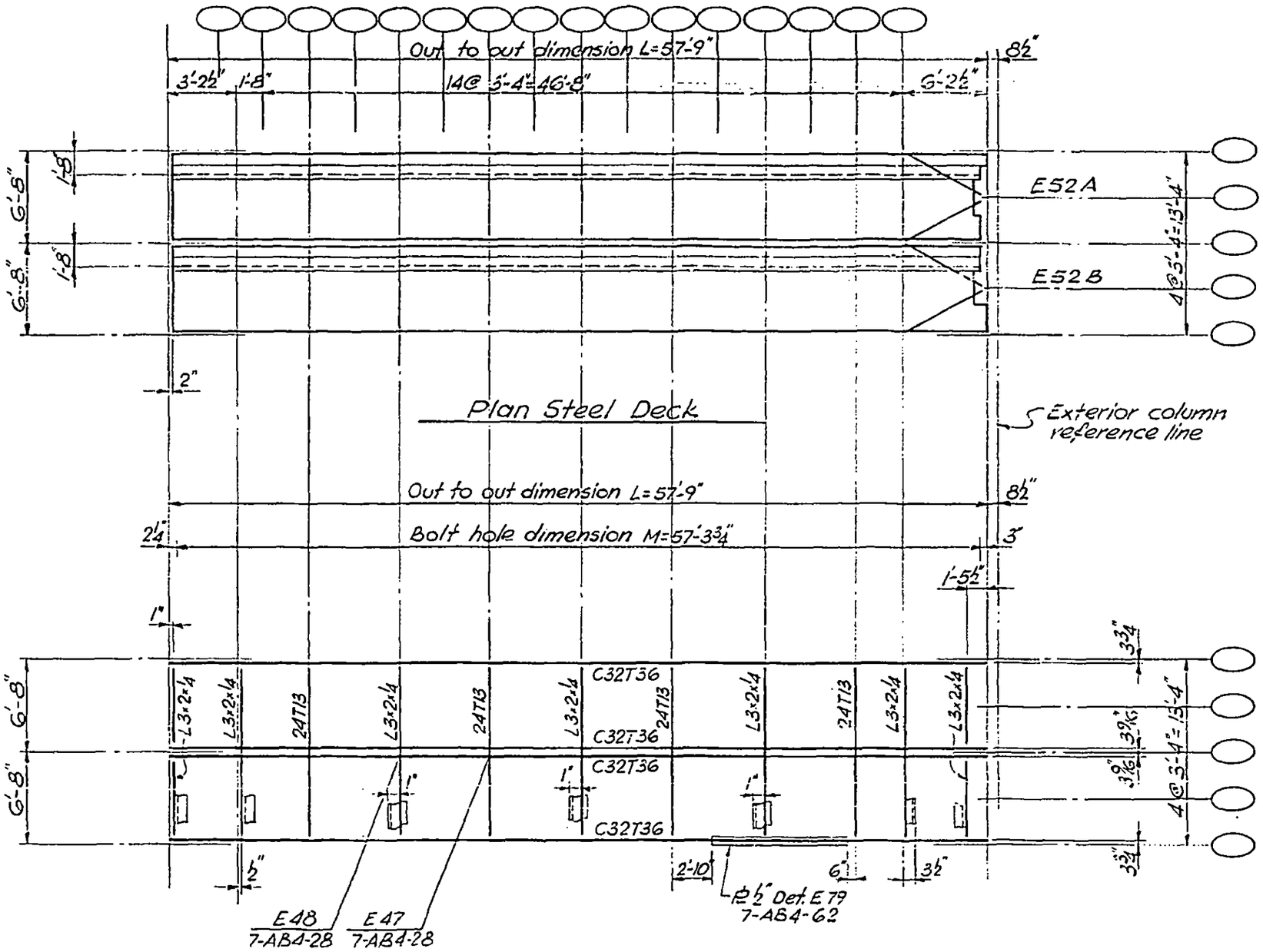

LICENSED PROFESSIONAL ENGINEER
LESLIE E. ROBERTSON
No. 34360
UNIVERSITY OF THE STATE OF NEW YORK

DESIGNED

DRAWN

REVIEWED

7-AB3-55

SKILLING, HELLE, CHRISTIANSEN, ROBERTSON — Structural & Civil Engineers

PROJECT	TITLE	DATE
THE WORLD TRADE CENTER	FLOOR PANEL C8	1-6-69

REVISIONS

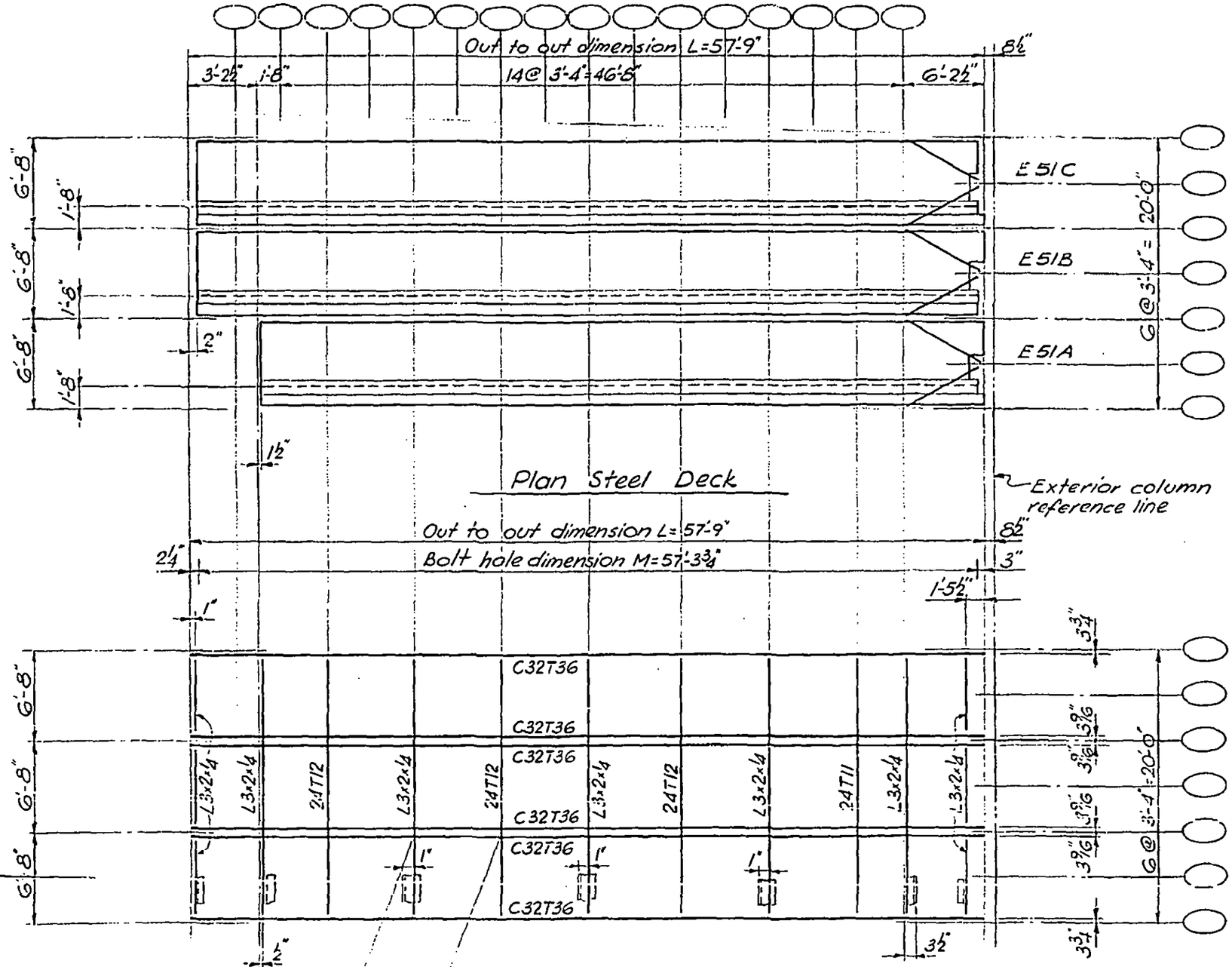

LICENSED PROFESSIONAL ENGINEER
LESLIE E. ROBERTSON
No. 34360
UNIVERSITY OF THE STATE OF NEW YORK

DESIGNED

DRAWN

REVIEWED

7-AB3-56

SKILLING, HELLE, CHRISTIANSEN, ROBERTSON — Structural & Civil Engineers

PROJECT: THE WORLD TRADE CENTER | TITLE: FLOOR PANEL CR8 | DATE: 1-6-69

REVISIONS

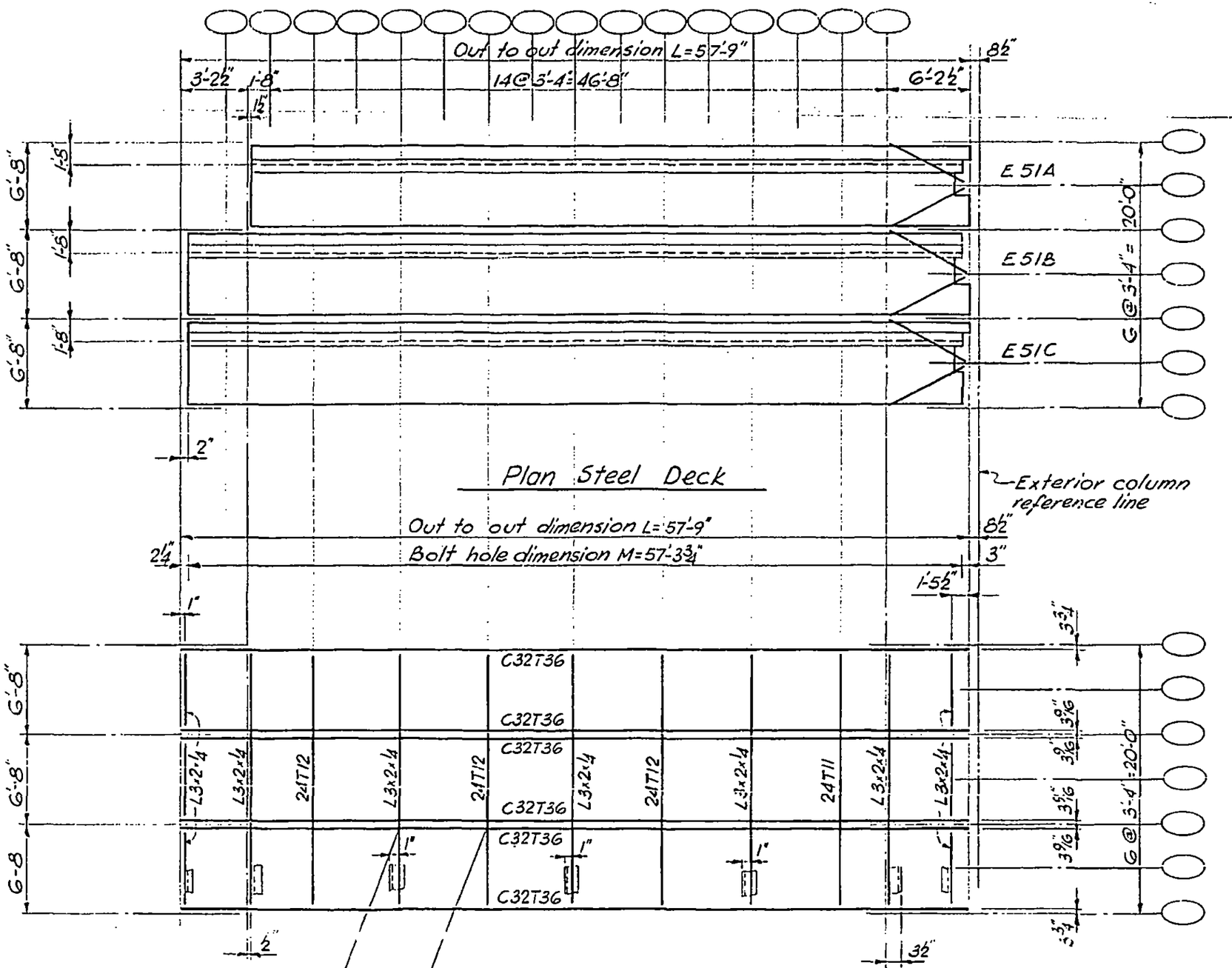

LICENSED PROFESSIONAL ENGINEER — LESLIE E. ROBERTSON — No. 34360 — UNIVERSITY OF THE STATE OF NEW YORK

DESIGNED

DRAWN

REVIEWED

41

7-AB3-57

SKILLING, HELLE, CHRISTIANSEN, ROBERTSON — Structural & Civil Engineers

PROJECT: THE WORLD TRADE CENTER | TITLE: FLOOR PANEL D8 | DATE: 1-6-69

REVISIONS

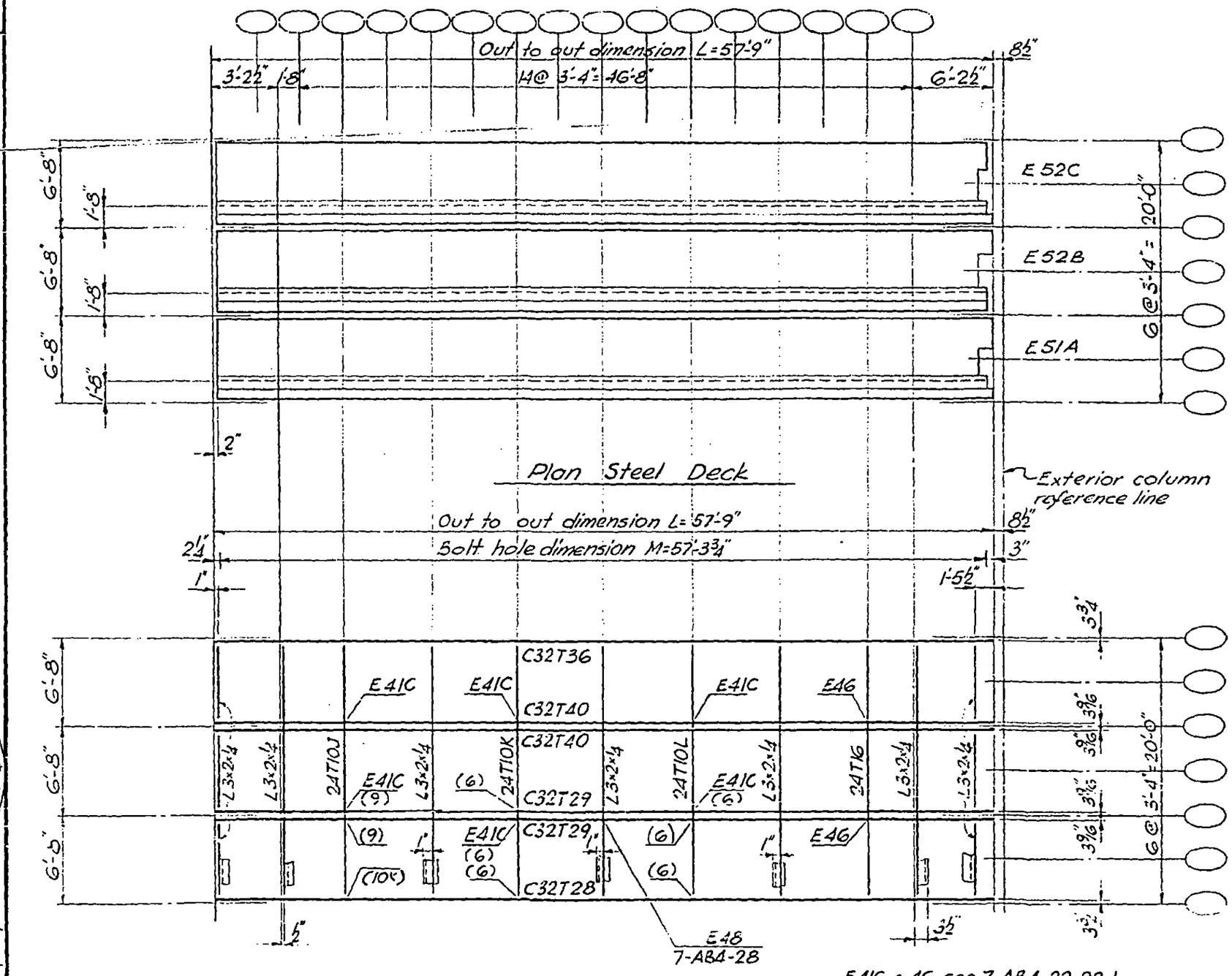

E41C & 4G see 7-AB4-22, 22.1

Plan Top Chord

7-AB3-58

LICENSED PROFESSIONAL ENGINEER — LESLIE E. ROBERTSON — No. 34360 — UNIVERSITY OF THE STATE OF NEW YORK

DESIGNED

DRAWN

REVIEWED

dl

SKILLING, HELLE, CHRISTIANSEN, ROBERTSON — Structural & Civil Engineers

PROJECT: THE WORLD TRADE CENTER | TITLE: FLOOR PANEL DR8 | DATE: 1-6-69

REVISIONS

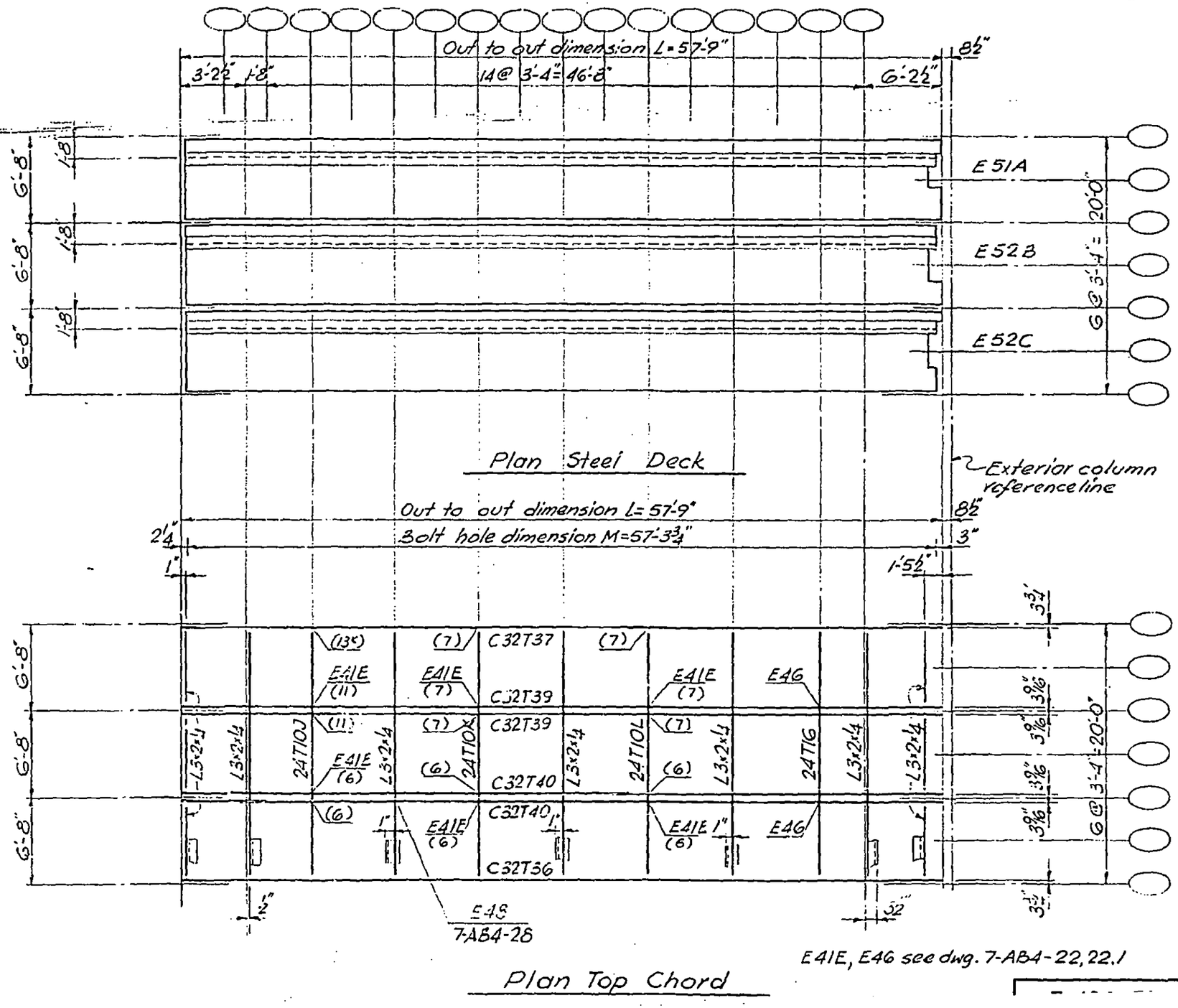

LICENSED PROFESSIONAL ENGINEER — LESLIE E. ROBERTSON — No. 34360 — UNIVERSITY OF THE STATE OF NEW YORK

DESIGNED

DRAWN

REVIEWED

4/3

SKILLING, HELLE, CHRISTIANSEN, ROBERTSON — Structural & Civil Engineers

PROJECT: THE WORLD TRADE CENTER | TITLE: FLOOR PANEL E8 | DATE: 1-6-69

REVISIONS

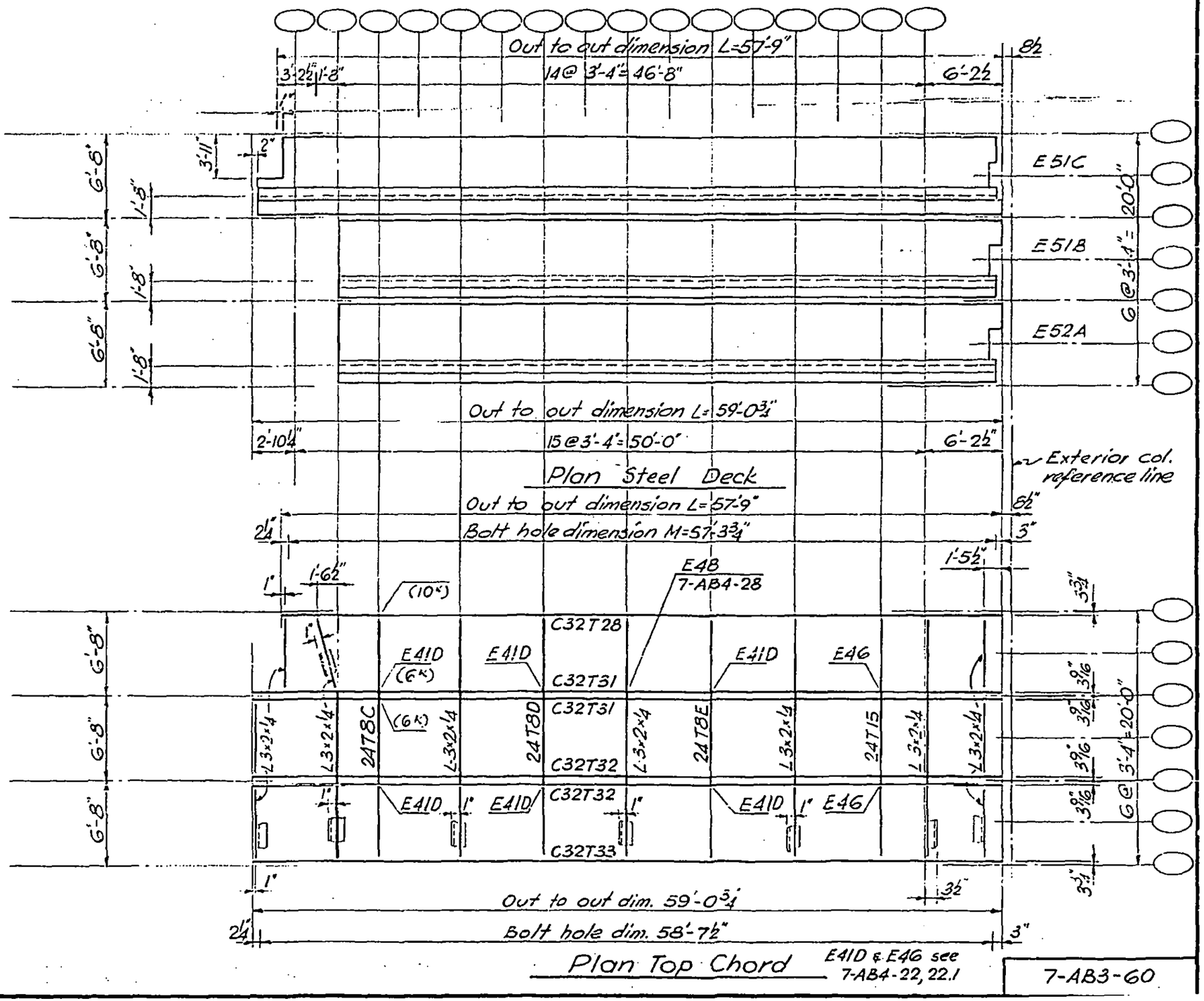

LICENSED PROFESSIONAL ENGINEER — LESLIE E. ROBERTSON — No. 34360 — UNIVERSITY OF THE STATE OF NEW YORK

DESIGNED

DRAWN

REVIEWED

7-AB3-60

SKILLING, HELLE, CHRISTIANSEN, ROBERTSON — Structural & Civil Engineers

PROJECT: TIIE WORLD TRADE CENTER | TITLE: FLOOR PANEL ER8 | DATE: 1-6-69

REVISIONS

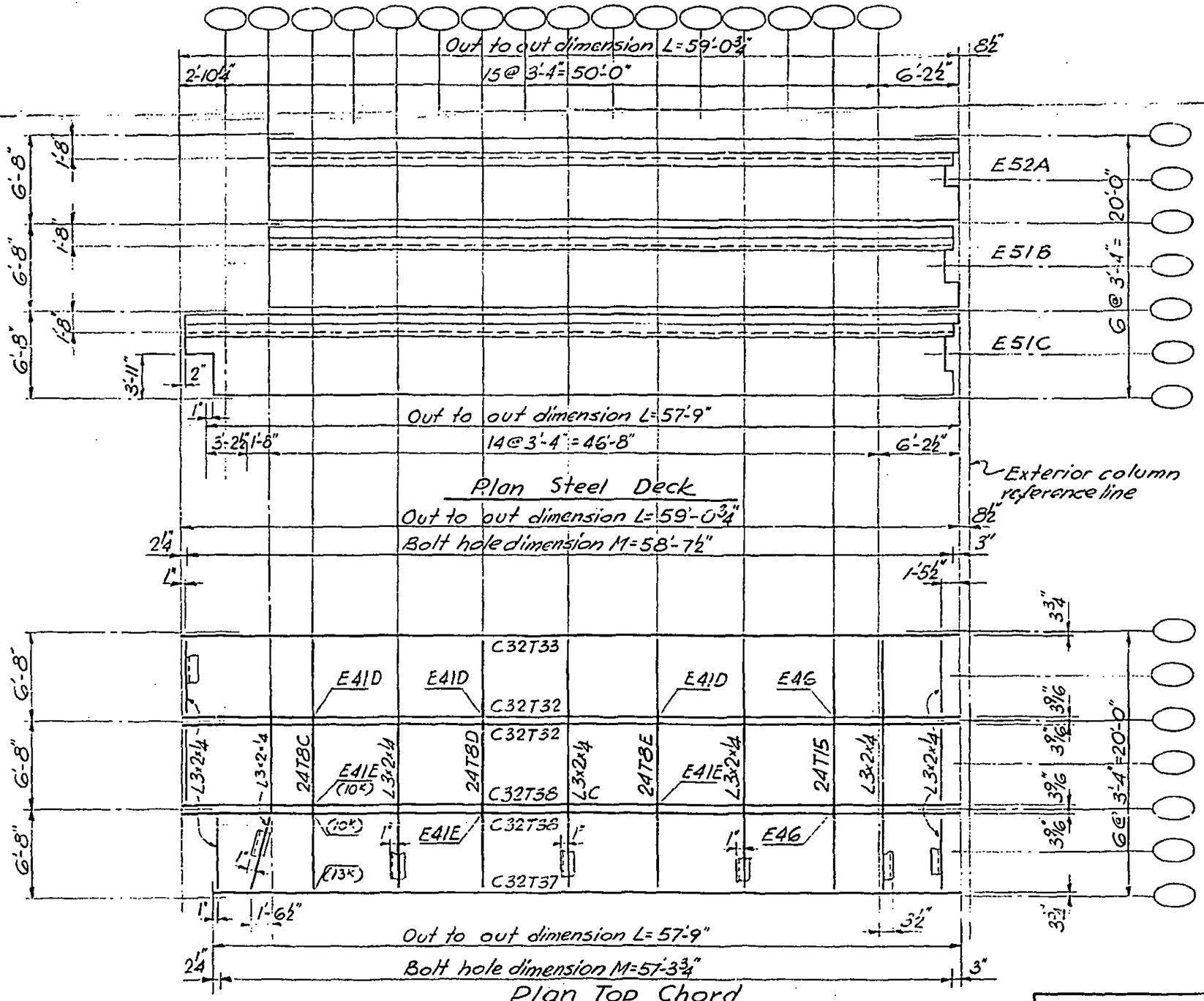

LICENSED PROFESSIONAL ENGINEER
LESLIE E. ROBERTSON
No. 34360
UNIVERSITY OF THE STATE OF NEW YORK

DESIGNED

DRAWN

REVIEWED

VS

7-AB3-61

SKILLING, HELLE, CHRISTIANSEN, ROBERTSON — Structural & Civil Engineers

PROJECT: THE WORLD TRADE CENTER | TITLE: FLOOR PANEL F8 | DATE: 1-20-69

REVISIONS

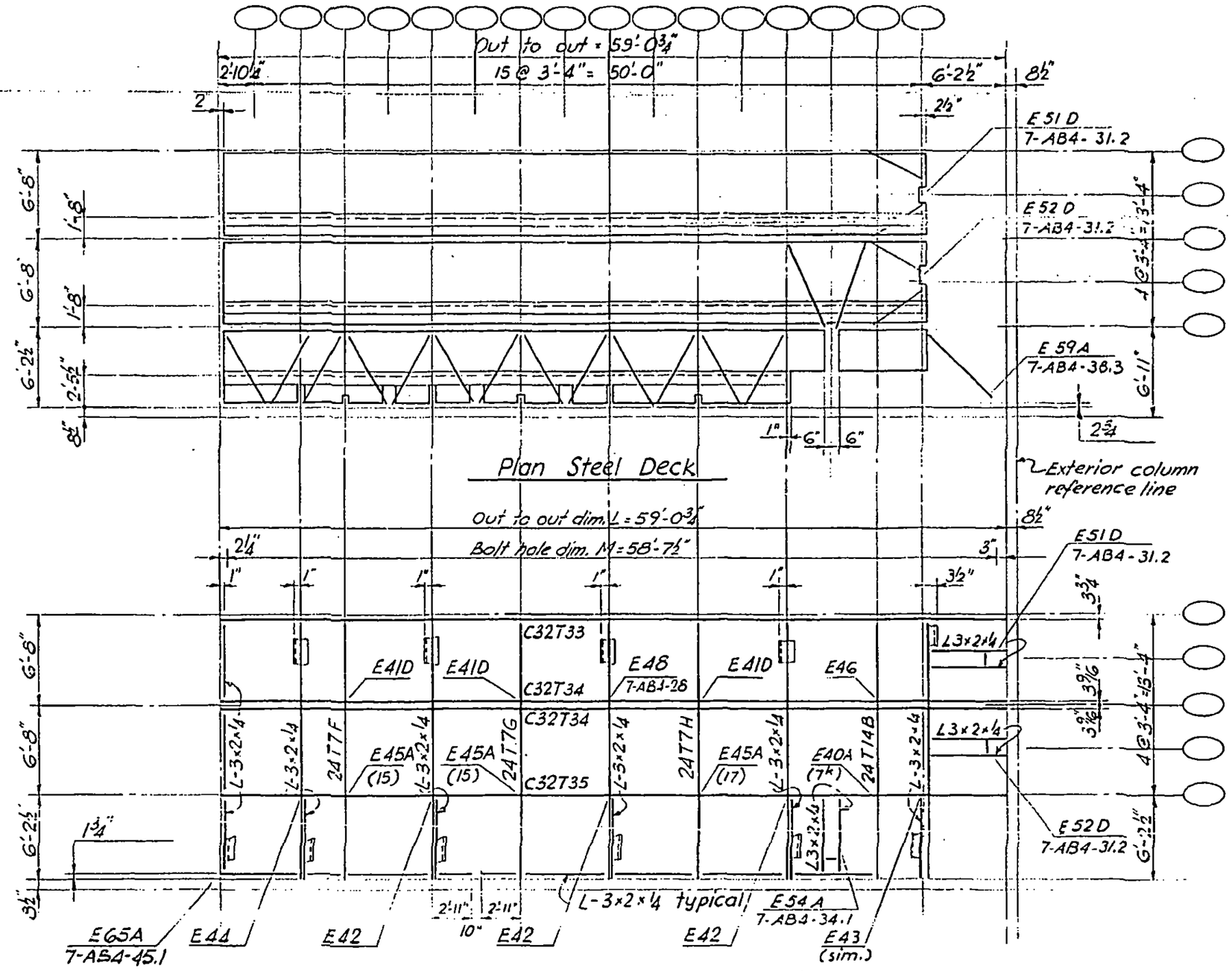

LICENSED PROFESSIONAL ENGINEER
LESLIE E. ROBERTSON
No. 34360
UNIVERSITY OF THE STATE OF NEW YORK

DESIGNED

DRAWN

REVIEWED

7-AB3-62

SKILLING, HELLE, CHRISTIANSEN, ROBERTSON — Structural & Civil Engineers

PROJECT: THE WORLD TRADE CENTER | TITLE: FLOOR PANEL FR8 | DATE: 1-20-69

REVISIONS

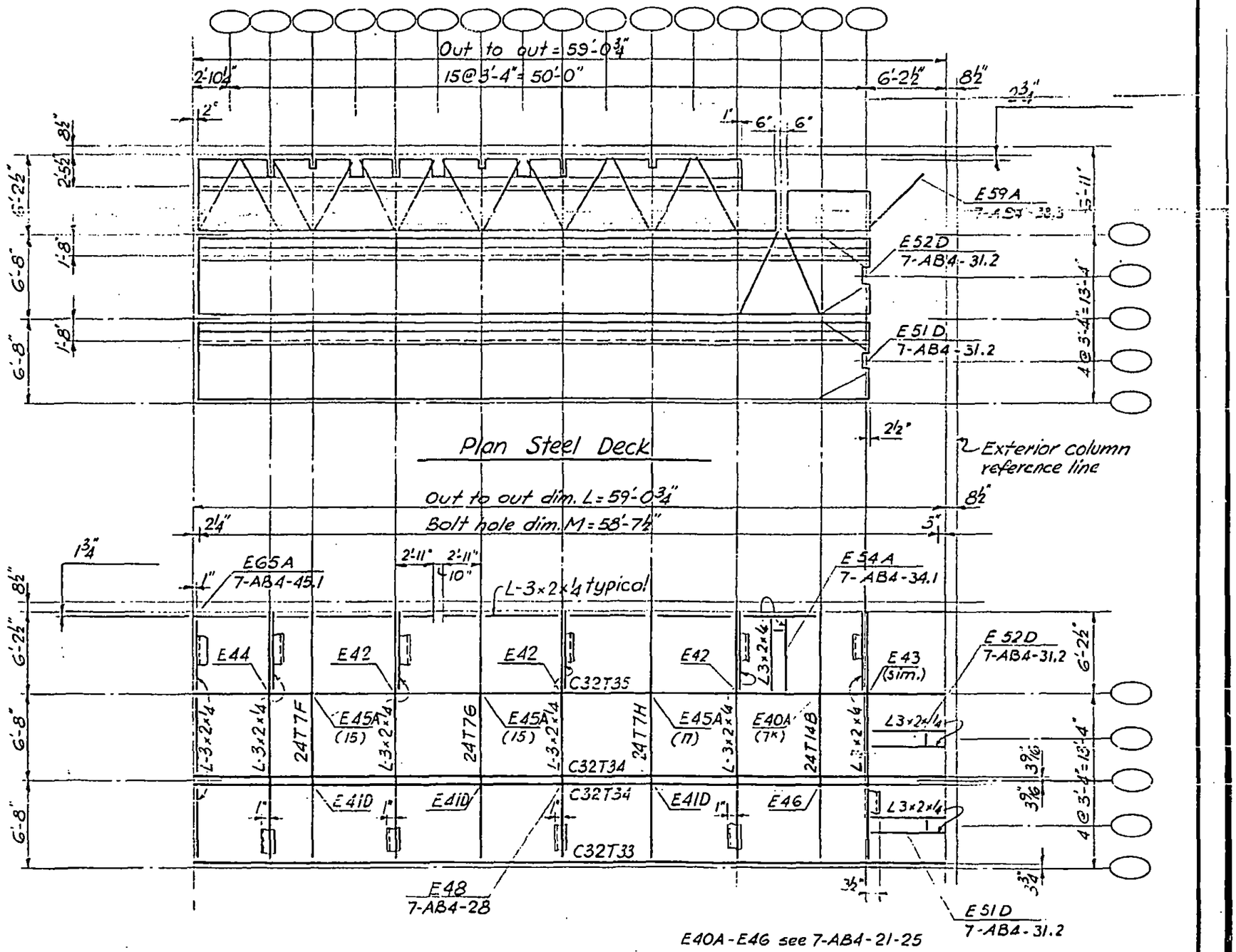

LICENSED PROFESSIONAL ENGINEER — LESLIE E. ROBERTSON — No. 34960 — UNIVERSITY OF THE STATE OF NEW YORK

DESIGNED

DRAWN

REVIEWED

7-AB3-63

SKILLING, HELLE, CHRISTIANSEN, ROBERTSON — Structural & Civil Engineers

PROJECT THE WORLD TRADE CENTER | TITLE FLOOR PANEL - DIMENSION SCHEDULE 5 | DATE 11-25-68

REVISIONS

PANEL NO.				OUT TO OUT PANEL DIM. L	BOLT HOLE DIMENSION M	DIMENSION A
D5A	DR5A	E5A	ER5A	59' - 9"	59' - 3¾"	5' - 2½"
D5B	DR5B	E5B	ER5B	59' - 8½"	59' - 3¼"	5' - 2"
D5C	DR5C	E5C	ER5C	59' - 8"	59' - 2¾"	5' - 1½"
D5D	DR5D	E5D	ER5D	59' - 5"	58' - 11¾"	4' - 10½"
D5E	DR5E	E5E	ER5E	59' - 3"	58' - 9¾"	4' - 8½"
D5F	DR5F	E5F	ER5F	59' - 2"	58' - 8¾"	4' - 7½"
D5G	DR5G	E5G	ER5G	58' - 11"	58' - 5¾"	4' - 4½"
D5H	DR5H	E5H	ER5H	58' - 8"	58' - 2¾"	4' - 1½"
D5J	DR5J	E5J	ER5J	58' - 7"	58' - 1¾"	4' - 0½"
D5K	DR5K	E5K	ER5K	58' - 6"	58' - 0¾"	3' - 11½"
D5M	DR5M	E5M	ER5M	58' - 3"	57' - 9¾"	3' - 8½"
D5N	DR5N	E5N	ER5N	57' - 9"	57' - 3¾"	3' - 2½"
D5P	DR5P	E5P	ER5P	57' - 7"	57' - 1¾"	3' - 0½"

LICENSED PROFESSIONAL ENGINEER
LESLIE E. ROBERTSON
No. 34360
UNIVERSITY OF THE STATE OF NEW YORK

DESIGNED

DRAWN

REVIEWED

7-AB.3-70

SKILLING - HELLE - CHRISTIANSEN - ROBERTSON Structural & Civil Engineers

PROJECT THE WORLD TRADE CENTER | TITLE FLOOR PANEL D5 | DATE 11-25-68

REVISIONS

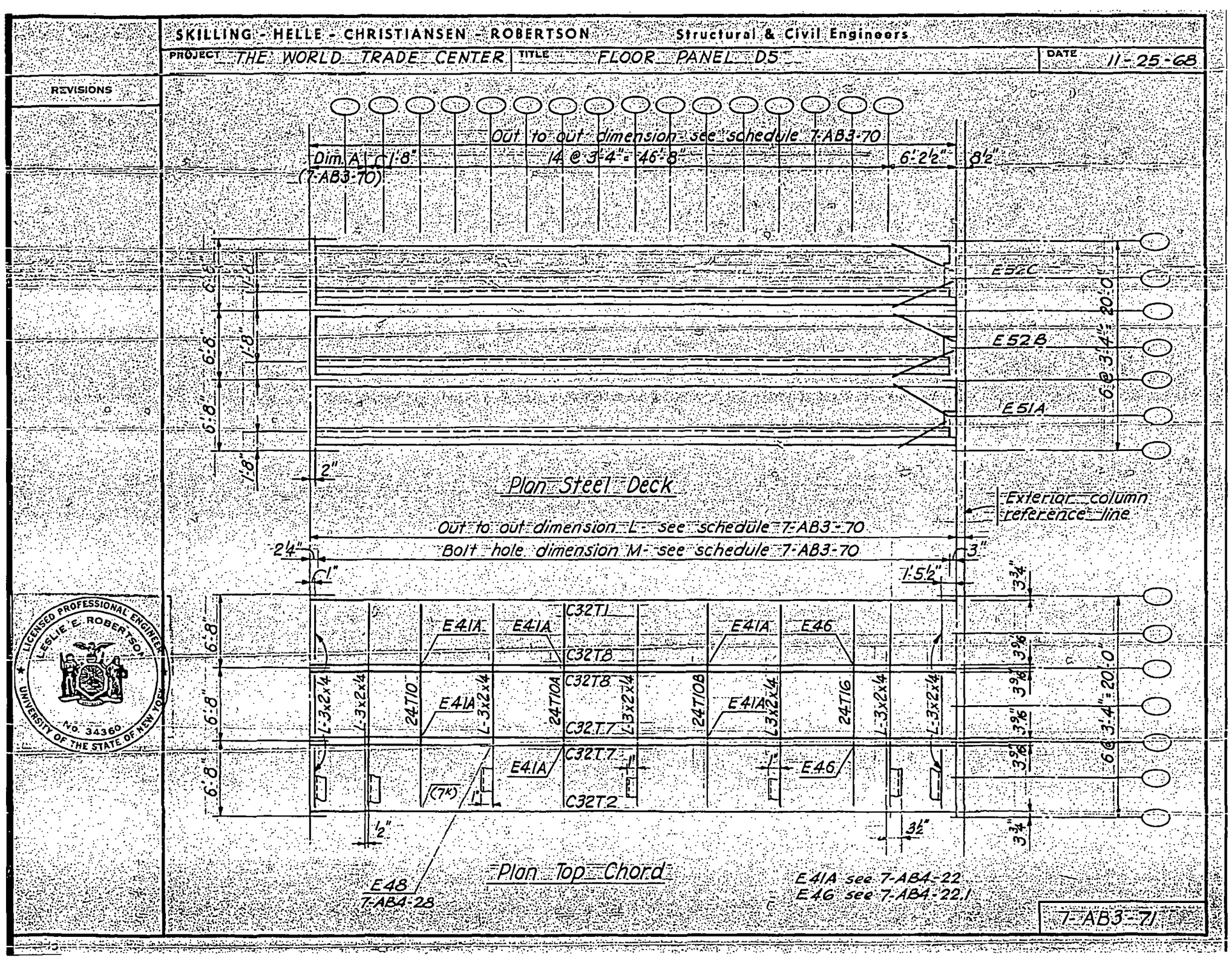

LICENSED PROFESSIONAL ENGINEER
LESLIE E. ROBERTSON
No. 34360
UNIVERSITY OF THE STATE OF NEW YORK

7-AB3-71

SKILLING - HELLE - CHRISTIANSEN - ROBERTSON   Structural & Civil Engineers

PROJECT THE WORLD TRADE CENTER | TITLE FLOOR PANEL DRS | DATE 11-25-68

REVISIONS

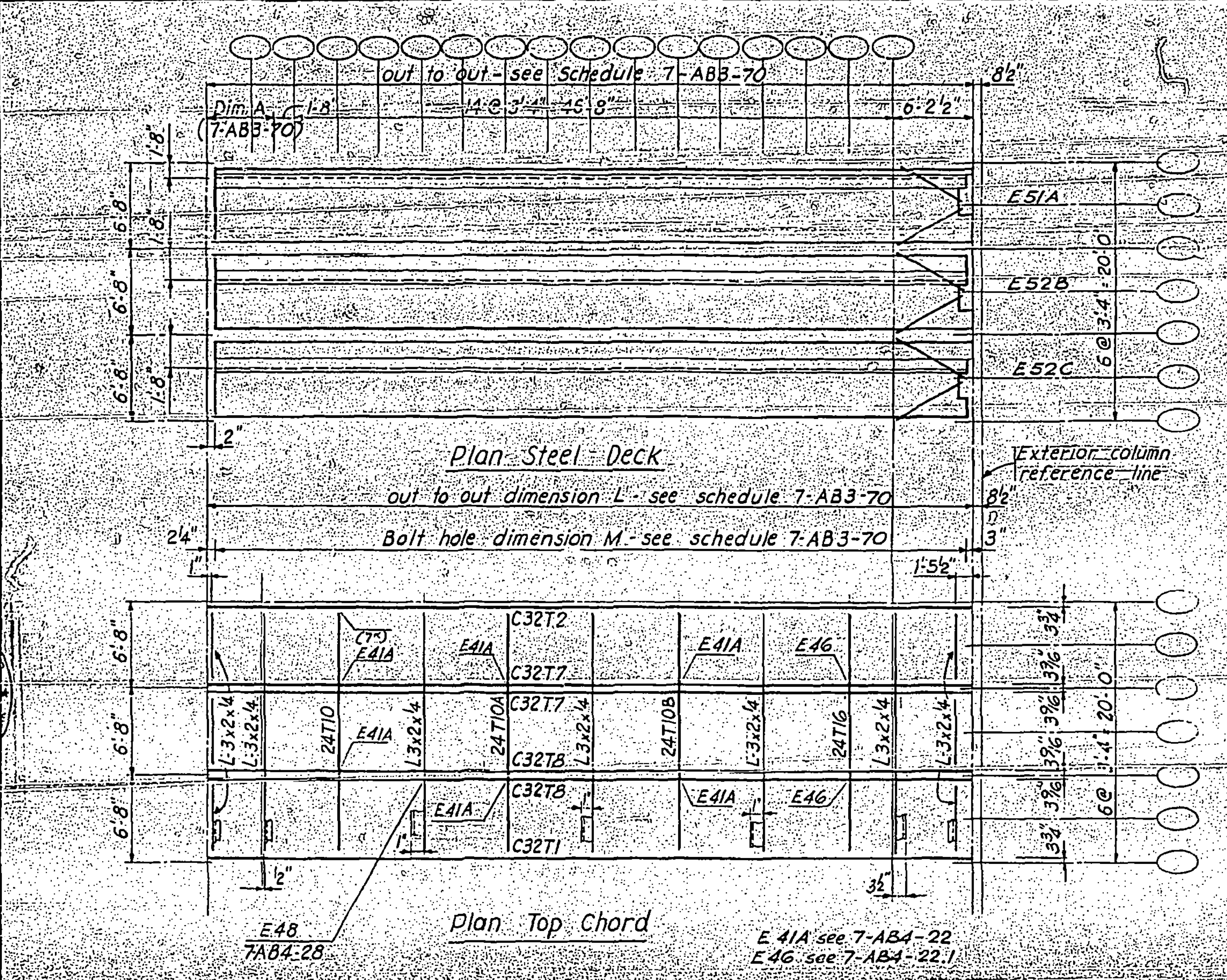

7-AB3-72

SKILLING - HELLE - CHRISTIANSEN - ROBERTSON — Structural & Civil Engineers

PROJECT THE WORLD TRADE CENTER

TITLE FLOOR PANEL E5

DATE 11-25-68

REVISIONS

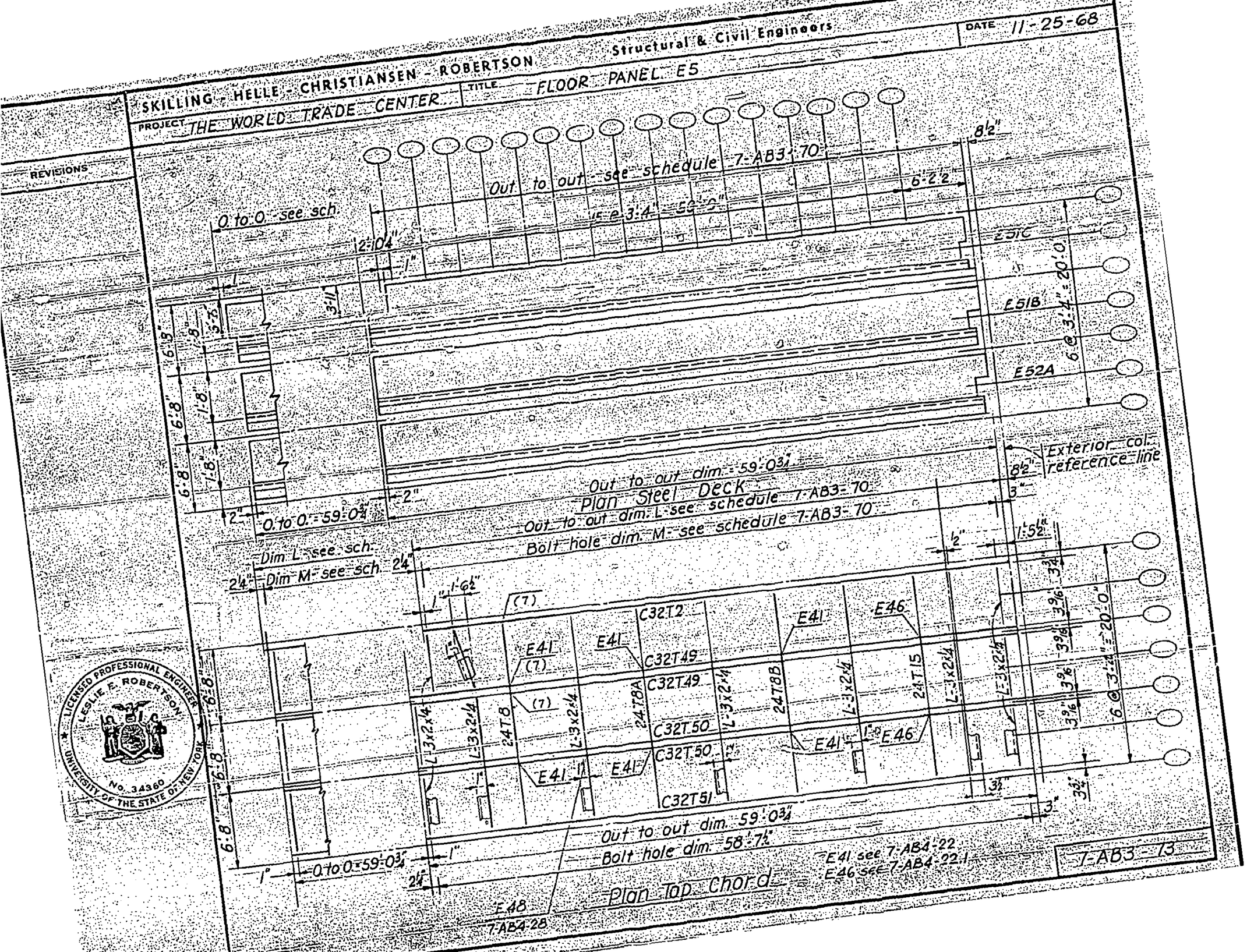

LICENSED PROFESSIONAL ENGINEER
LESLIE E. ROBERTSON
No. 34360
UNIVERSITY OF THE STATE OF NEW YORK

SKILLING - HELLE - CHRISTIANSEN - ROBERTSON Structural & Civil Engineers

PROJECT THE WORLD TRADE CENTER | TITLE FLOOR PANEL ER5 | DATE 11-25-68

REVISIONS

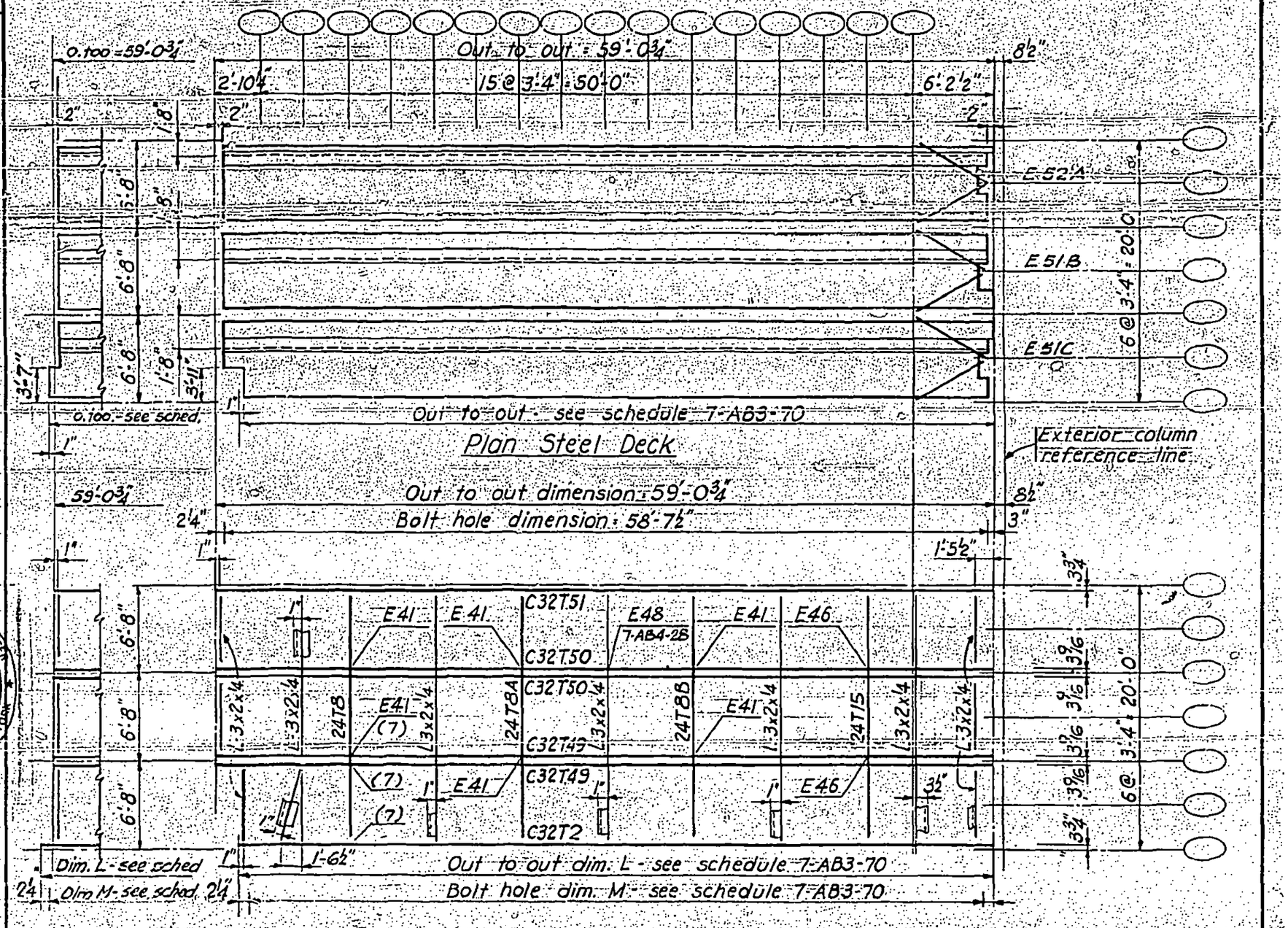

LICENSED PROFESSIONAL ENGINEER
LESLIE E. ROBERTSON
No. 34980
UNIVERSITY OF THE STATE OF NEW YORK

7-AB3-74

SKILLING - HELLE - CHRISTIANSEN - ROBERTSON — Structural & Civil Engineers

PROJECT THE WORLD TRADE CENTER | TITLE FLOOR PANEL F5 | DATE 11-25-68

REVISIONS

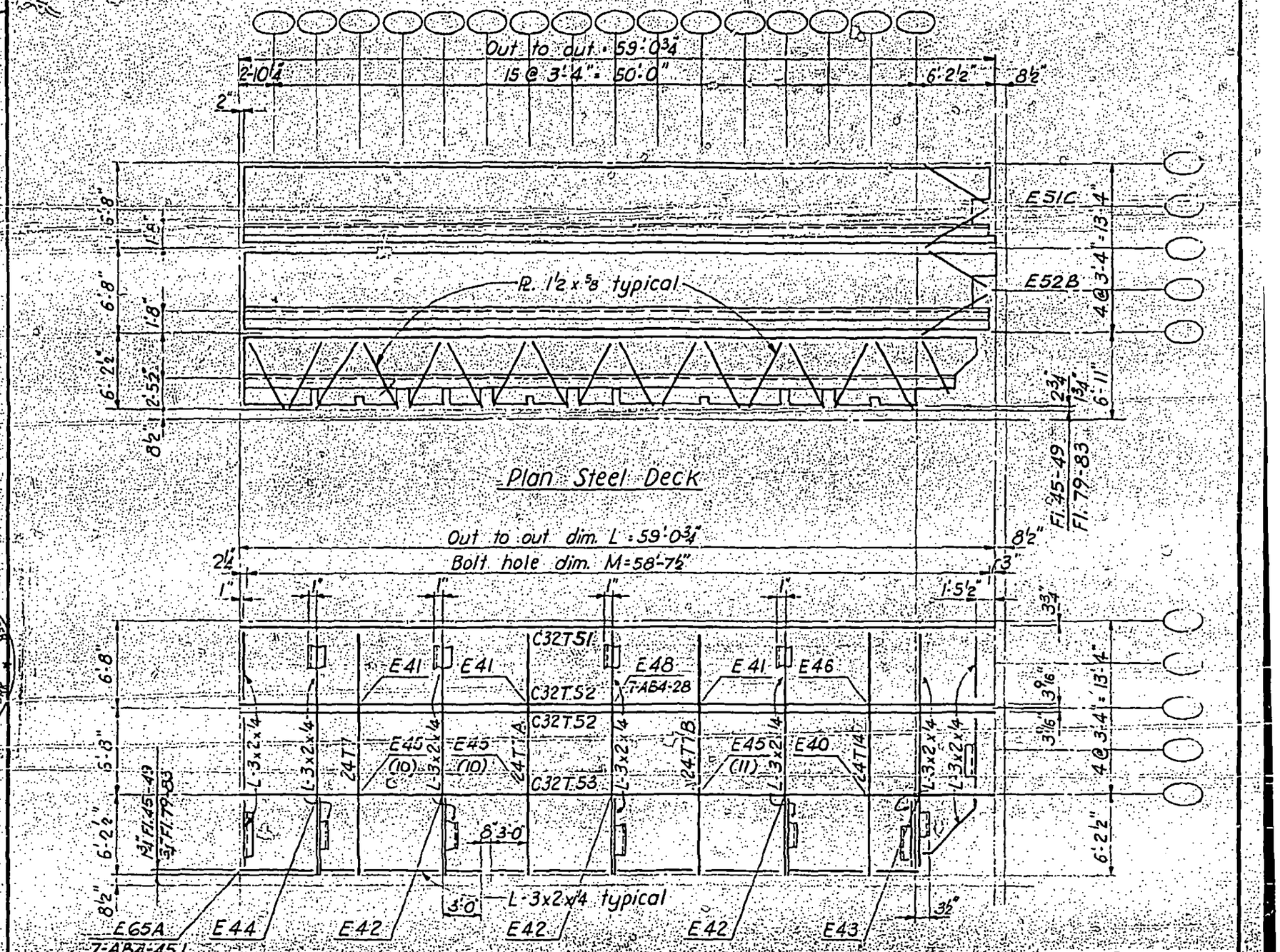

LICENSED PROFESSIONAL ENGINEER
LESLIE E. ROBERTSON
No. 34360
UNIVERSITY OF THE STATE OF NEW YORK

REVISIONS

HANSEN - ROBERTSON — Structural & Civil Engineers

THE WORLD TRADE CENTER | TITLE FLOOR PANEL FR 5 | DATE 11-25-68

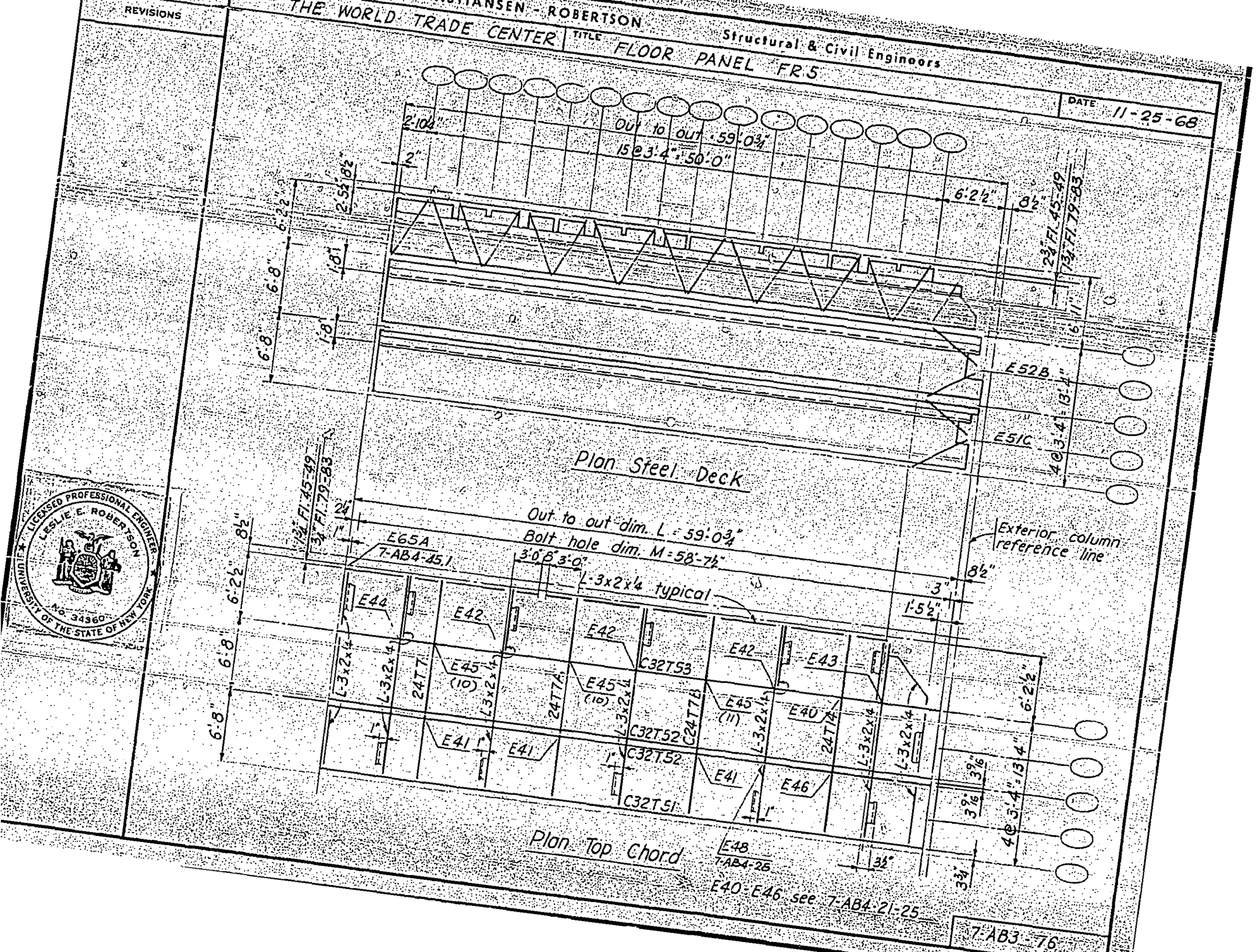

LICENSED PROFESSIONAL ENGINEER
LESLIE E. ROBERTSON
No. 34360
UNIVERSITY OF THE STATE OF NEW YORK

SKILLING, HELLE, CHRISTIANSEN, ROBERTSON — Structural & Civil Engineers

PROJECT: THE WORLD TRADE CENTER | TITLE: FLOOR PANEL C 6 | DATE: 1-6-69

REVISIONS

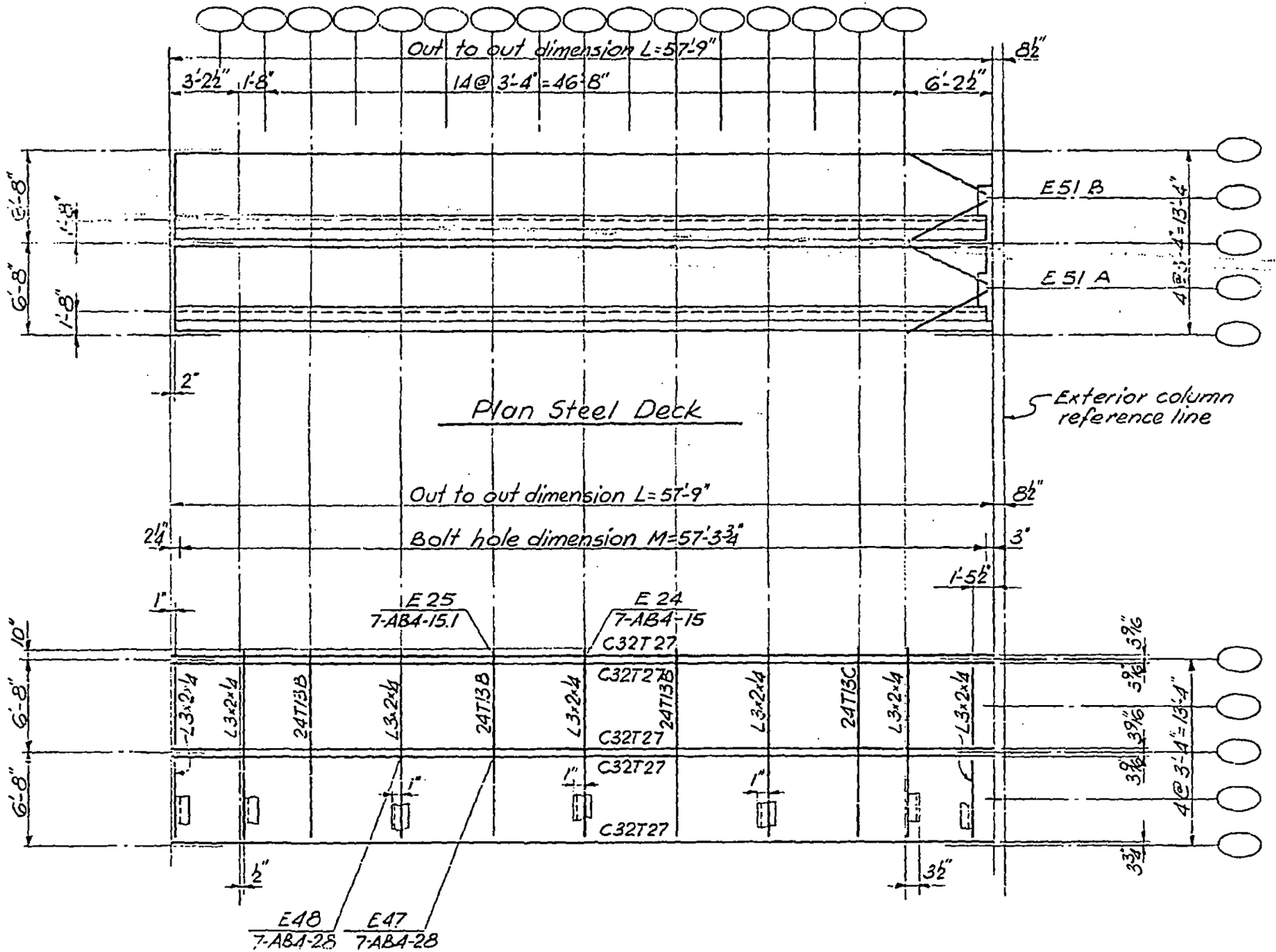

LICENSED PROFESSIONAL ENGINEER — LESLIE E. ROBERTSON — No. 34360 — UNIVERSITY OF THE STATE OF NEW YORK

DESIGNED

DRAWN

7-AB3-77

SKILLING, HELLE, CHRISTIANSEN, ROBERTSON — Structural & Civil Engineers

PROJECT: THE WORLD TRADE CENTER | TITLE: FLOOR PANEL CRG | DATE: 1-6-69

REVISIONS

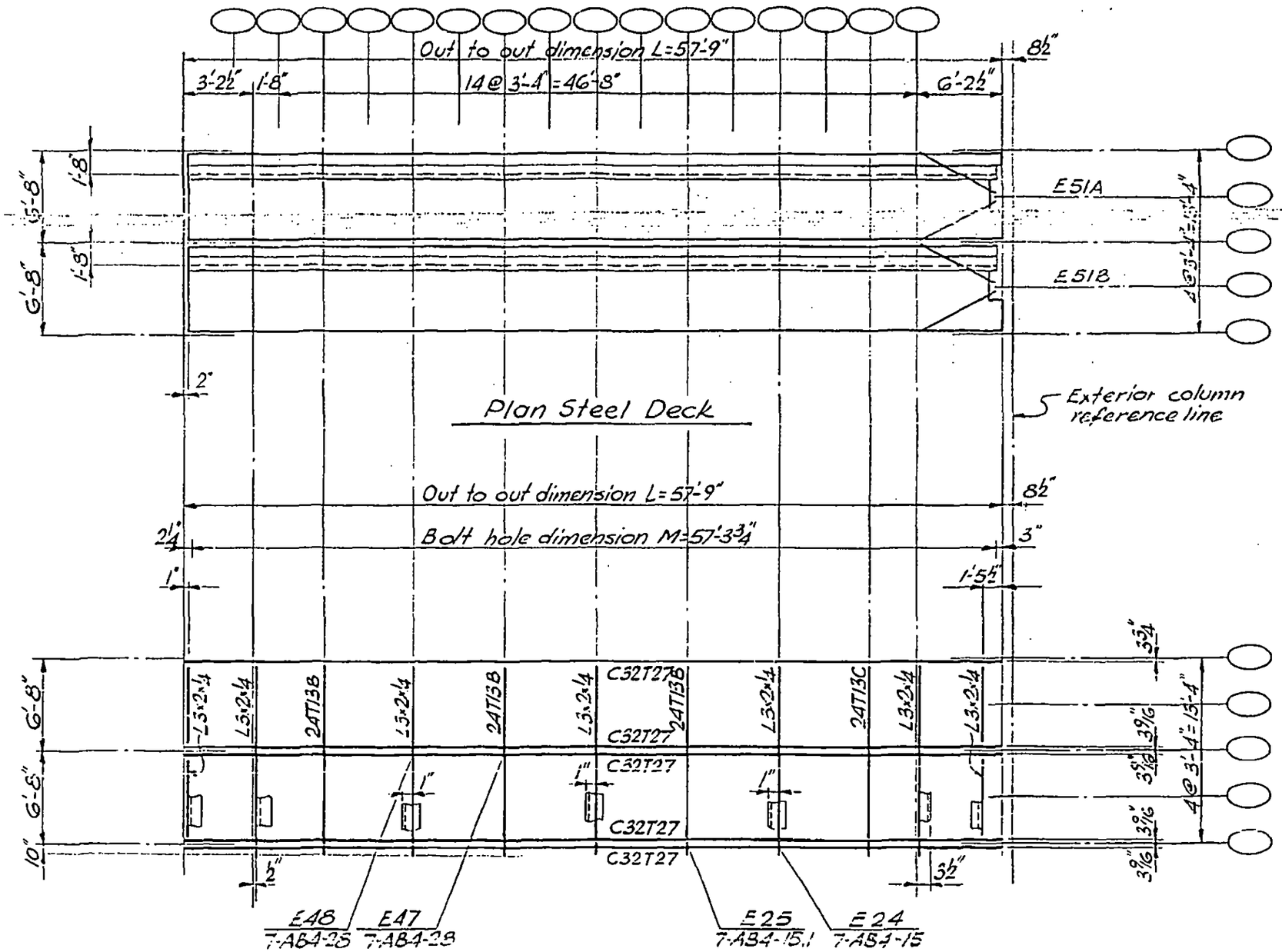

LICENSED PROFESSIONAL ENGINEER — LESLIE E. ROBERTSON — No. 34360 — UNIVERSITY OF THE STATE OF NEW YORK

DESIGNED

DRAWN

REVIEWED

J7

7-AB3-78

SKILLING - HELLE - CHRISTIANSEN - ROBERTSON Structural & Civil Engineers

PROJECT THE WORLD TRADE CENTER | TITLE FLOOR PANEL C7 | DATE 10-20-67

REVISIONS

1-3-68
2-15-68
4-1-68
7-22-68
10-15-68

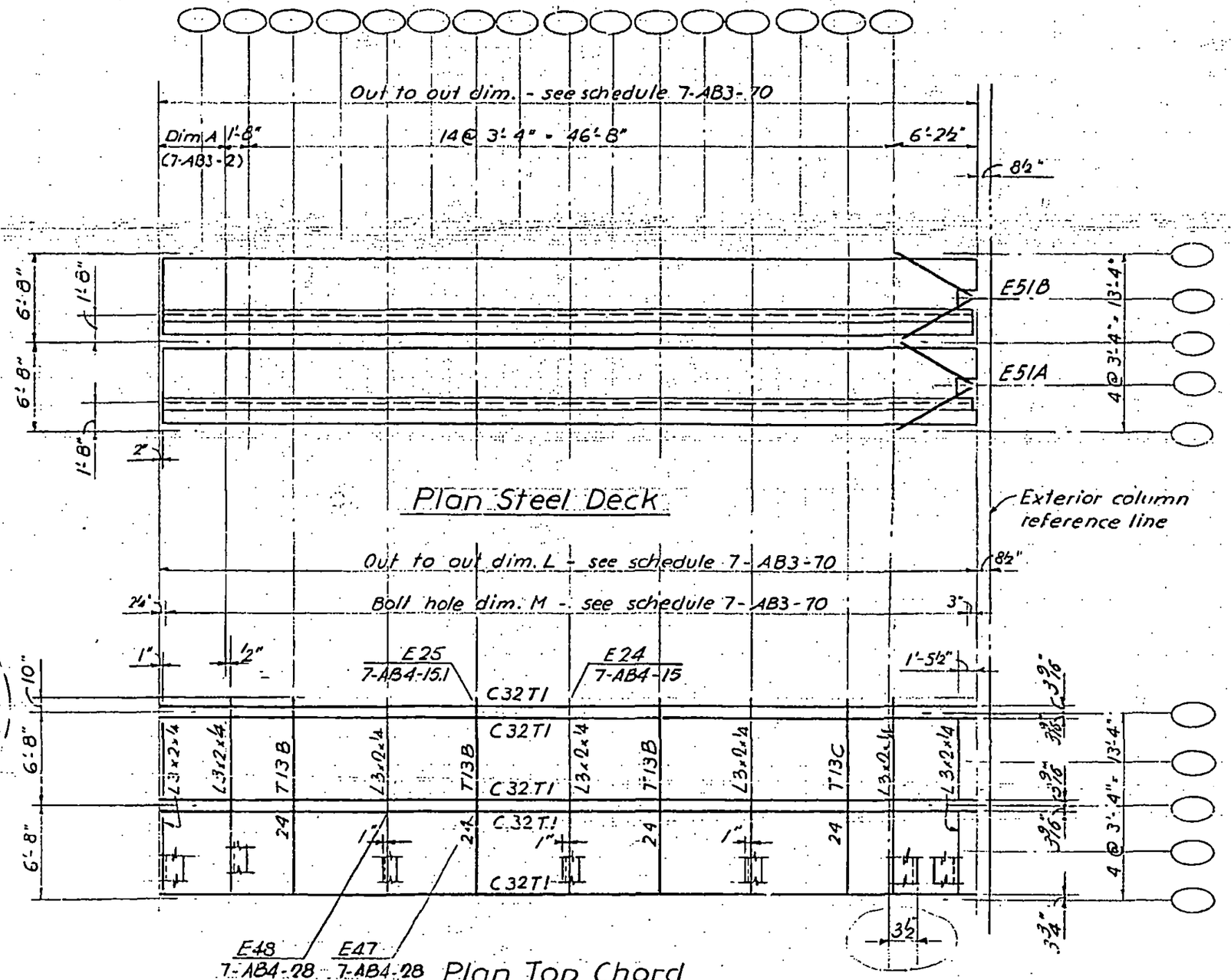

Plan Steel Deck

Plan Top Chord

LICENSED PROFESSIONAL ENGINEER LESLIE E. ROBERTSON No. 34350 UNIVERSITY OF THE STATE OF NEW YORK

7-AB3-79

SKILLING - HELLE - CHRISTIANSEN - ROBERTSON Structural & Civil Engineers

PROJECT THE WORLD TRADE CENTER | TITLE FLOOR PANEL CR7 | DATE 10-20-67

REVISIONS

1-3-68
2-15-68
4-1-68
7-22-68
10-15-68

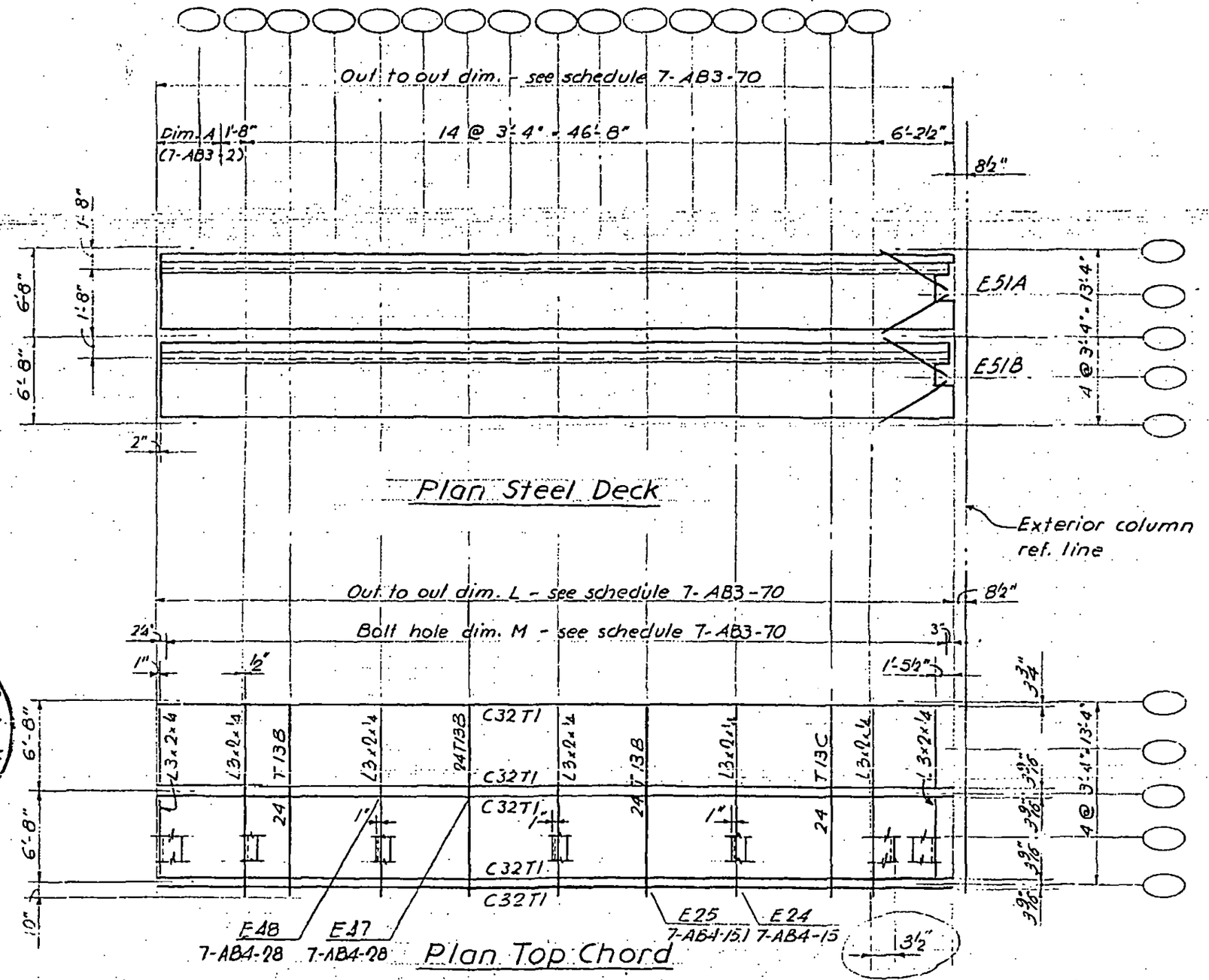

LICENSED PROFESSIONAL ENGINEER
LESLIE E. ROBERTSON
No. 34360
UNIVERSITY OF THE STATE OF NEW YORK

7-AB3-80

SKILLING - HELLE - CHRISTIANSEN - ROBERTSON Structural & Civil Engineers

PROJECT	TITLE	DATE
THE WORLD TRADE CENTER	FLOOR PANEL DETAILS - INDEX & GENERAL NOTES	1-3-68

REVISIONS

4- 1-68
7-22-68
8- 1-68
8-15-68
10- 4-68
1- 3-69
1- 6-69
1-20-69
2- 3-69
3- 3-69
4- 1-69
Printed 5-1-69

7-AB4- 1	Floor Panel Details, Index & General Notes
7-AB4- 2	Schedule of Details - Tower A
7-AB4- 2.1	Schedule of Details - Tower A
7-AB4- 2.2 thru 2.4	Schedule of Details - Tower B
7-AB4- 3	Floor Panel - Detail E1-E3
7-AB4- 3.1	Floor Panel - Detail E1-E4
7-AB4- 4	Floor Panel - Detail E5 & E5A
7-AB4- 5	Floor Panel - Detail E6
7-AB4- 6	Floor Panel - Detail E6
7-AB4- 7	Floor Panel - Detail E8
7-AB4- 8	Floor Panel - Detail E9 & E9A
7-AB4- 9	Floor Panel - Detail E10
7-AB4-10	Floor Panel - Detail E11
7-AB4-11	Floor Panel - Detail E12
7-AB4-11.1	Floor Panel - Detail E12, E13
7-AB4-11.2	Floor Panel - Detail E13
7-AB4-11.3	Floor Panel - Detail E12, E13, E17, E-18
7-AB4-12	Floor Panel - Detail E16
7-AB4-13	Floor Panel - Detail E17
7-AB4-13.1	Floor Panel - Detail E18
7-AB4-13.2	Floor Panel - Detail E17 & E18
7-AB4-14	Floor Panel - Detail E19, E21, E22
7-AB4-14.1	Floor Panel - Detail E20
7-AB4-15	Floor Panel - Detail E23, E24
7-AB4-15.1 15.2	Floor Panel - Detail E25, E26, E26A
7-AB4-16	Floor Panel - Detail E27 & E27A
7-AB4-17 thru 7-AB4-17.7	Floor Panel - Detail E28 - E28E
7-AB4-18	Floor Panel - Detail E34, E35, E35A
7-AB4-18.1	Floor Panel - Detail E30,
7-AB4-18.2	Floor Panel - Detail E30, E34, E34A
7-AB4-18.3	Floor Panel - Detail E34A
7-AB4-18.4	Floor Panel - Detail E34B
7-AB4-18.5	Floor Panel - Detail E31
7-AB4-19	Floor Panel - Detail E38 & E39
7-AB4-20	Not Used
7-AB4-21	Floor Panel - Detail E40, E40A, E45, E45A
7-AB4-22	Floor Panel - Detail E41, E41A, E41C - E41E
7-AB4-22.1	Floor Panel - Detail E41B & E46
7-AB4-23	Floor Panel - Detail E42
7-AB4-24	Floor Panel - Detail E43
7-AB4-25	Floor Panel - Detail E44
7-AB4-26	Not Used
7-AB4-27	Not Used
7-AB4-28	Floor Panel - Detail E47 & E48
7-AB4-28.1	Floor Panel - Detail E47A
7-AB4-29	Floor Panel - Detail E 49 & E49A
7-AB4-30	Floor Panel - Detail E50
7-AB4-31,31.1,.2	Floor Panel - Detail E51A, E51B, E51C, E51D, E52D
7-AB4-32,32.1	Floor Panel - Detail E52A, E52B, E52C
7-AB4-33	Floor Panel - Detail E53
7-AB4-34,34.1	Floor Panel - Detail E54, E54A
7-AB4-35	Floor Panel - Detail E55
7-AB4-36	Floor Panel - Detail E56
7-AB4-37	Floor Panel - Detail E57
7-AB4-38	Floor Panel - Detail E58, E59, E60
7-AB4-38.1 & 38.2,38.3	Floor Panel - Detail E58, E59, E59A
7-AB4-39	Floor Panel - Detail E50
7-AB4-40	Floor Panel - Detail E61 - E67
7-AB4-41	Floor Panel - Detail E68A
7-AB4-41.1	Floor Panel - Detail E68
7-AB4-42	Floor Panel - Detail E61 - E67
7-AB4-42.1	Damper Connection - Detail E61 - E67
7-AB4-43	Floor Panel - Detail E60, E68, E68A
7-AB4-44	Floor Panel - Detail E61 - E67
7-AB4-45,45.1	Floor Panel - Detail E65
7-AB4-46	Floor Panel - Detail E60 & E68
7-AB4-46.1	Floor Panel - Detail E68A
7-AB4-47	Floor Panel - Detail E60 - E67
7-AB4-47.1	Floor Panel - Detail E68 & E68A
7-AB4-48	Floor Panel - Detail E61 - E64
7-AB4-49	Floor Panel - Detail E60, E66, E67
7-AB4-49.1	Floor Panel - Detail E68 & E68A
7-AB4-49.2	Floor Panel - Detail E69
7-AB4-50 thru 7-AB4-52	Floor Panel - Detail E70 thru E73
7-AB4-53	Floor Panel - Detail E74
7-AB4-54	Floor Panel - Detail E75
7-AB4-55	Floor Panel - Detail E75A
7-AB4-56	Floor Panel - Detail E76
7-AB4-57	Floor Panel - Detail E76
7-AB4-58	Floor Panel - Detail E76A, E76B
7-AB4-59	Floor Panel - Detail E76A, E76B, E77
7-AB4-60	Floor Panel - Detail E76, E76A, E76B
7-AB4-61	Floor Panel - Detail E77A
7-AB4-62	Floor Panel - Detail E78, E79

NOTES: 1. The Contractor shall detail all connections, erection aids and all else required for the fabrication, assembly and erection of the pre-fabricated floor panels. Steel deck and power/telephone cell details shall be done by the Contractor for WTC Contract 222.00 -- all other details by the Contractor for WTC Contract 221.00. Details shall incorporate the geometry requirements and specific detail requirements where indicated in Drawing Book 7. Details shall be proportioned to transmit the loads indicated in Drawing Book 7 and all other loads required for assembly and for erection.

2. The Contractor shall submit details to the Engineer for review prior to performing any work.

LICENSED PROFESSIONAL ENGINEER ★ LESLIE E. ROBERTSON ★ No. 34360 ★ UNIVERSITY OF THE STATE OF NEW YORK

99

7-AB4-1

SKILLING - HELLE - CHRISTIANSEN - ROBERTSON Structural & Civil Engineers

PROJECT THE WORLD TRADE CENTER TITLE FLOOR PANEL DETAIL SCHEDULE - TOWER A DATE 10-20-67

REVISIONS
1-3-68
7-22-68
1-6-69

No.	Floor	Detail	Ref. dwg.
(1)	10-38	E6	7-AB4-5
	39, 40	E6	7-AB4-5
	44-46	E10	7-AB4-8
	47-49	E9	7-AB4-8
	50-74	E6	7-AB4-5
	78, 79	E9A	7-AB4-8
	80-106	E6	7-AB4-5
(2)	10-38	E6	7-AB4-5
	39, 40	E6	7-AB4-5
	44-46	E10	7-AB4-8
	47-49	E9	7-AB4-8
	50-74	E6	7-AB4-5
	78	E9A	7-AB4-8
	79-106	E6	7-AB4-5
(3)	10-38	E6	7-AB4-5
	39, 40	E6	7-AB4-5
	44, 45	E10	7-AB4-8
	46	E8	7-AB4-7
	47-71	E6	7-AB4-5
	72-74	E8	7-AB4-7
	78-80	E10	7-AB4-8
	81-83	E9A	7-AB4-8
	84-106	E6	7-AB4-5
(4)	10, 11	E6	7-AB4-5
	12-38	E6	7-AB4-5
	39	E6	7-AB4-5
	40	E8	7-AB4-7
	44	E10	7-AB4-8
	45, 46	E8	7-AB4-7
	47-71	E6	7-AB4-5
	72-74	E8	7-AB4-7
	78-80	E10	7-AB4-8
	81-83	E9A	7-AB4-8
	84-106	E6	7-AB4-5

No.	Floor	Detail	Ref. dwg.
(5)	10-40	E17	7-AB4-13
	44	E22	7-AB4-14
	45-49	E21	7-AB4-14
	50-74	E17	7-AB4-13
	78	E22	7-AB4-14
	79	E21	7-AB4-14
	80-106	E17	7-AB4-13
(6)	10-40	E12	7-AB4-11
	44	E22	7-AB4-14
	45-49	E21	7-AB4-14
	50-66	E12	7-AB4-11
	67	E12	7-AB4-11
	68-74	E12	7-AB4-11
	78	E22	7-AB4-14
	79	E21	7-AB4-14
	80-106	E12	7-AB4-11
(7)	10-40	E18	7-AB4-13.1
	44-49	E19	7-AB4-14
	50-74	E18	7-AB4-13.1
	78, 79	E19	7-AB4-14
	80-106	E18	7-AB4-13.1
(8)	10-24	E13	7-AB4-11.2
	25	E13	7-AB4-11.2
	26-40	E13	7-AB4-11.2
	44-49	E21	7-AB4-14
	50-58	E13	7-AB4-11.2
	59	E13	7-AB4-11.2
	60-66	E13	7-AB4-11.2
	67	E13	7-AB4-11.2
	68-74	E13	7-AB4-11.2
	78-79	E21	7-AB4-14
	80-91	E13	7-AB4-11.2
	92	E13	7-AB4-11.2
	93-106	E13	7-AB4-11.2

No.	Floor	Detail	Ref. dwg.
(9)	10-24	E16	7-AB4-12
	25	E11	7-AB4-10
	26-40	E16	7-AB4-12
	44-49	E20	7-AB4-14.1
	50-58	E16	7-AB4-12
	59	E11	7-AB4-10
	60-74	E16	7-AB4-12
	78-79	E20	7-AB4-14.1
	80-91	E16	7-AB4-12
	92	E11	7-AB4-10
	93-106	E16	7-AB4-12
(10)	Same	as (5) except	
	79	E17	7-AB4-13
(11)	Same	as (6) except	
	79	E12	7-AB4-11
(12)	Same	as (7) except	
	79	E18	7-AB4-13.1
(13)	Same	as (8) except	
	79	E13	7-AB4-11.2
(14)	Same	as (9) except	
	79	E16	7-AB4-12
(15)	10-40	E17	7-AB4-13
	44	E22	7-AB4-14
	45	E21	7-AB4-14
	46-74	E17	7-AB4-13
	78	E22	7-AB4-14
	79-83	E21	7-AB4-14
	84-106	E17	7-AB4-13

LICENSED PROFESSIONAL ENGINEER
LESLIE E. ROBERTSON
No. 34300
UNIVERSITY OF THE STATE OF NEW YORK

SKILLING - HELLE - CHRISTIANSEN - ROBERTSON — Structural & Civil Engineers

PROJECT THE WORLD TRADE CENTER | TITLE FLOOR PANEL DETAIL SCHEDULE-TOWER A | DATE 10-20-67

REVISIONS
1-3-68
7-22-68
1-6-69

No.	Floor	Detail	Ref. Dwg.
(16)	10-40	E12	7-AB4-11
	44	E22	7-AB4-14
	45	E21	7-AB4-14
	46-66	E12	7-AB4-11
	67	E12	7-AB4-11
	68-74	E12	7-AB4-11
	78	E22	7-AB4-14
	79-83	E21	7-AB4-14
	84-106	E12	7-AB4-11
(17)	10-40	E18	7-AB4-13.1
	44,45	E19	7-AB4-14
	46-74	E18	7-AB4-13.1
	78-83	E19	7-AB4-14
	84-106	E18	7-AB4-13.1
(18)	10-24	E13	7-AB4-11.2
	25	E13	7-AB4-11.2
	26-40	E13	7-AB4-11.2
	44,45	E21	7-AB4-14
	46-58	E13	7-AB4-11.2
	59	E13	7-AB4-11.2
	60-66	E13	7-AB4-11.2
	67	E13	7-AB4-11.2
	68-74	E13	7-AB4-11.2
	78-83	E21	7-AB4-14
	84-91	E13	7-AB4-11.2
	92	E13	7-AB4-11.2
	93-106	E13	7-AB4-11.2
(19)	10-24	E16	7-AB4-12
	25	E11	7-AB4-10
	26-40	E16	7-AB4-12
	44,45	E20	7-AB4-14.1
	46-58	E16	7-AB4-12
	59	E11	7-AB4-10
	60-74	E16	7-AB4-12
	78-83	E20	7-AB4-14.1
	84-91	E16	7-AB4-12
	92	E11	7-AB4-10
	93-106	E16	7-AB4-12

No.	Floor	Detail	Ref. Dwg
(20)	Same as	(15) except	
	45	E17	7-AB4-13
(21)	Same as	(16) except	
	45	E12	7-AB4-11
(22)	Same as	(17) except	
	45	E18	7-AB4-13.1
(23)	Same as	(18) except	
	45	E13	7-AB4-11.2
(24)	Same as	(19) except	
	45	E16	7-AB4-12
(25)	10-40	E30	7-AB4-18.1
	44	E31	7-AB4-18.5
	45-49	E30	7-AB4-18.1
	50-66	E30	7-AB4-18.1
	67	E30	7-AB4-18.1
	68-74	E30	7-AB4-18.1
	78	E31	7-AB4-18.5
	79	E30	7-AB4-18.1
	80-106	E30	7-AB4-18.1
(26)	10-40	E34	7-AB4-18
	44	E35A	7-AB4-18
	45-49	E34	7-AB4-18
	50-66	E34	7-AB4-18
	67	E34	7-AB4-18
	68-74	E34	7-AB4-18
	78	E35	7-AB4-18
	79	E34	7-AB4-18
	80-106	E34	7-AB4-18
(27)	Same as	(25)	
(28)	Same as	(26) except	
	44	E35	7-AB4-18

No.	Floor	Detail	Ref. Dwg.
(29)	10-40	E30	7-AB4-18.1
	44	E31	7-AB4-18.5
	45	E30	7-AB4-18.1
	46-66	E30	7-AB4-18.1
	67	E30	7-AB4-18.1
	68-74	E30	7-AB4-18.1
	78	E31	7-AB4-18.5
	79-83	E30	7-AB4-18.1
	84-106	E30	7-AB4-18.1
(30)	10-40	E34	7-AB4-18
	44	E35	7-AB4-18
	45	E34	7-AB4-18
	46-66	E34	7-AB4-18
	67	E34	7-AB4-18
	68-74	E34	7-AB4-18
	78	E35	7-AB4-18
	79-83	E34	7-AB4-18
	84-106	E34	7-AB4-18
(31)	Same as	(29) except	
	45	E30	7-AB4-18.1
(32)	Same as	(30) except	
	45	E34	7-AB4-18

7-AB4-2.1

LESLIE E. ROBERTSON — LICENSED PROFESSIONAL ENGINEER — No. 34360 — STATE OF N.Y.

SKILLING - HELLE - CHRISTIANSEN - ROBERTSON Structural & Civil Engineers

PROJECT THE WORLD TRADE CENTER | TITLE FLOOR PANEL DETAIL SCHEDULE - TOWER B | DATE 10-20-67

REVISIONS
1-3-68
7-22-68
10-4-68
1-6-69

NO.	Floor	Detail	Ref. dwg.
①	10	Hold	
	11	Hold	
	12	Hold	
	13	Hold	
	14-38	E6	7-AB4-5
	39-40	E6	7-AB4-5
	44-46	E10	7-AB4-8
	47-49	E9	7-AB4-8
	50-74	E6	7-AB4-5
	78-79	E9(A)	7-AB4-8
	80-106	E6	7-AB4-5
②	10	Hold	
	11	Hold	
	12	Hold	
	13	Hold	
	14-38	E6	7-AB4-5
	39,40	E6	7-AB4-5
	44-46	E10	7-AB4-8
	47-49	E9	7-AB4-8
	50-74	E6	7-AB4-5
	78	E9(A)	7-AB4-8
	79-106	E6	7-AB4-5
③	10	Hold	
	11	Hold	
	12	Hold	
	13	Hold	
	14-38	E6	7-AB4-5
	39,40	E6	7-AB4-5
	44,45	E10	7-AB4-8
	46	E8	7-AB4-7
	47-71	E6	7-AB4-5
	72-74	E8	7-AB4-7
	78-80	E10	7-AB4-8
	81-83	E9(A)	7-AB4-8
	84-106	E6	7-AB4-5

NO.	Floor	Detail	Ref. dwg.
④	10	Hold	
	11	Hold	
	12	Hold	
	13	Hold	
	14-38	E6	7-AB4-5
	39	E6	7-AB4-5
	40	E8	7-AB4-7
	44	E10	7-AB4-8
	45-46	E8	7-AB4-7
	47-71	E6	7-AB4-5
	72-74	E8	7-AB4-7
	78-80	E10	7-AB4-8
	81-83	E9(A)	7-AB4-8
	84-106	E6	7-AB4-5
⑤	10	Hold	
	11	Hold	
	12	Hold	
	13	Hold	
	14-40	E17	7-AB4-13
	44	E22	7-AB4-14
	45-49	E21	7-AB4-14
	50-74	E17	7-AB4-13
	78	E22	7-AB4-14
	79	E21	7-AB4-14
	80-106	E17	7-AB4-13
⑥	10	Hold	
	11	Hold	
	12	Hold	
	13	Hold	
	14-40	E12	7-AB4-11
	44	E22	7-AB4-14
	45-49	E21	7-AB4-14
	50-74	E12	7-AB4-11
	78	E22	7-AB4-14
	79	E21	7-AB4-14
	80-106	E12	7-AB4-11

No.	Floor	Detail	Ref. dwg.
⑦	10	Hold	
	11	Hold	
	12	Hold	
	13	Hold	
	14-40	E18	7-AB4-13.1
	44-49	E19	7-AB4-14
	50-74	E18	7-AB4-13.1
	78-79	E19	7-AB4-14
	80-106	E18	7-AB4-13.1
⑧	10	Hold	
	11	Hold	
	12	Hold	
	13	Hold	
	14-24	E13	7-AB4-11.2
	25	E13	7-AB4-11.2
	26-40	E13	7-AB4-11.2
	44-49	E21	7-AB4-14
	50-58	E13	7-AB4-11.2
	59	E13	7-AB4-11.2
	60-74	E13	7-AB4-11.2
	78-79	E21	7-AB4-14
	80-91	E13	7-AB4-11.2
	92	E13	7-AB4-11.2
	93-106	E13	7-AB4-11.2

LICENSED PROFESSIONAL ENGINEER
LESLIE E. ROBERTSON
No. 34360
UNIVERSITY OF THE STATE OF NEW YORK

7-AB4-2.2

SKILLING - HELLE - CHRISTIANSEN - ROBERTSON Structural & Civil Engineers

PROJECT THE WORLD TRADE CENTER | TITLE FLOOR PANEL DETAIL SCHEDULE - TOWER B | DATE 10-20-67

REVISIONS
1-3-68
7-22-68
10-4-68
1-6-69

No.	Floor	Detail	Ref. dwg.
(9)	10	Hold	
	11	Hold	
	12	Hold	
	13	Hold	
	14-24	E16	7-AB4-12
	25	E11	7-AB4-10
	26-40	E16	7-AB4-12
	44-49	E20	7-AB4-14.1
	50-58	E16	7-AB4-12
	59	E11	7-AB4-10
	60-74	E16	7-AB4-12
	78,79	E20	7-AB4-14.1
	80-91	E16	7-AB4-12
	92	E11	7-AB4-10
	93-106	E16	7-AB4-12
(10)	Same as (5) except		
	79	E17	7-AB4-13
(11)	Same as (6) except		
	79	E12	7-AB4-11
(12)	Same as (7) except		
	79	E18	7-AB4-13.1
(13)	Same as (8) except		
	79	E13	7-AB4-11.2
(14)	Same as (9) except		
	79	E16	7-AB4-12
(15)	10	Hold	
	11	Hold	
	12	Hold	
	13	Hold	
	14-40	E17	7-AB4-13
	44	E22	7-AB4-14
	45	E21	7-AB4-14
	46-74	E17	7-AB4-13
	78	E22	7-AB4-14
	79-83	E21	7-AB4-14
	84-106	E17	7-AB4-13

No.	Floor	Detail	Ref. dwg.
(16)	10	Hold	
	11	Hold	
	12	Hold	
	13	Hold	
	14-40	E12	7-AB4-11
	44	E22	7-AB4-14
	45	E21	7-AB4-14
	46-74	E12	7-AB4-11
	76	E22	7-AB4-14
	79-83	E21	7-AB4-14
	84-106	E12	7-AB4-11
(17)	10	Hold	
	11	Hold	
	12	Hold	
	13	Hold	
	14-40	E18	7-AB4-13.1
	44-45	E19	7-AB4-14
	46-74	E18	7-AB4-13.1
	78-83	E19	7-AB4-14
	84-106	E18	7-AB4-13.1
(18)	10	Hold	
	11	Hold	
	12	Hold	
	13	Hold	
	14-24	E13	7-AB4-11.2
	25	E13	7-AB4-11.2
	26-40	E13	7-AB4-11.2
	44,45	E21	7-AB4-14
	46-58	E13	7-AB4-11.2
	59	E13	7-AB4-11.2
	60-74	E13	7-AB4-11.2
	78-83	E21	7-AB4-14
	84-91	E13	7-AB4-11.2
	92	E13	7-AB4-11.2
	93-106	E13	7-AB4-11.2

No.	Floor	Detail	Ref. dwg.
(19)	10	Hold	
	11	Hold	
	12	Hold	
	13	Hold	
	14-24	E16	7-AB4-12
	25	E11	7-AB4-10
	26-40	E16	7-AB4-12
	44-45	E20	7-AB4-14.1
	46-58	E16	7-AB4-12
	59	E11	7-AB4-10
	60-74	E16	7-AB4-12
	78-83	E20	7-AB4-14.1
	84-91	E16	7-AB4-12
	92	E11	7-AB4-10
	93-106	E16	7-AB4-12
(20)	Same as (15) except		
	45	E17	7-AB4-13
(21)	Same as (16) except		
	45	E12	7-AB4-11
(22)	Same as (17) except		
	45	E18	7-AB4-13.1
(23)	Same as (18) except		
	45	E13	7-AB4-11.2
(24)	Same as (19) except		
	45	E16	7-AB4-12
(25)	10	Hold	
	11	Hold	
	12	Hold	
	13	Hold	
	14-40	E30	7-AB4-18.1
	44	E31	7-AB4-18(5)
	45-49	E30	7-AB4-18(1)
	50-74	E30	7-AB4-18.1
	78	E31	7-AB4-18(5)
	79	E30	7-AB4-18(1)
	80-106	E30	7-AB4-18.1

7-AB4-2.3

LICENSED PROFESSIONAL ENGINEER LESLIE E. ROBERTSON No. 34360 STATE OF NEW YORK

SKILLING - HELLE - CHRISTIANSEN - ROBERTSON Structural & Civil Engineers

PROJECT THE WORLD TRADE CENTER | TITLE FLOOR PANEL DETAIL SCHEDULE- TOWER B | DATE 10-27-67

REVISIONS
1-3-68
7-22-68
8-15-68
1-6-69

No.	Floor	Detail	Ref. dwg.
(26)	10	Hold	
	11	Hold	
	12	Hold	
	13	Hold	
	14-24,26-40	E34	7-AB4-18
	25	E34B	7-AB4-18.4
	44	E35	7-AB4-18
	45-49	E34	7-AB4-18
	50-58,60-74	E34	7-AB4-18
	59	E34B	7-AB4-18.4
	78	E35	7-AB4-18
	79	E34	7-AB4-18
	80-91,93-106	E34	7-AB4-18
	92	E34B	7-AB4-18.4
(27)	Same as (25) except		
	79	E30	7-AB4-18.1
(28)	Same as (26) except		
	25,59,79,92	E34	7-AB4-18
(29)	10	Hold	
	11	Hold	
	12	Hold	
	13	Hold	
	14-40	E30	7-AB4-18.1
	44	E31	7-AB4-18.5
	45	E30	7-AB4-18
	46-74	E30	7-AB4-18.1
	78	E31	7-AB4-18.5
	79-83	E30	7-AB4-18.1
	84-106	E30	7-AB4-18.1

No.	Floor	Detail	Ref. dwg.
(30)	10	Hold	
	11	Hold	
	12	Hold	
	13	Hold	
	14-40	E34	7-AB4-18
	44	E35	7-AB4-18
	45	E34	7-AB4-18
	46-74	E34	7-AB4-18
	78	E35	7-AB4-18
	79-83	E34	7-AB4-18
	84-106	E34	7-AB4-18
(31)	Same as (29) except		
	45	E30	7-AB4-18.1
(32)	10	Hold	
	11	Hold	
	12	Hold	
	13	Hold	
	14-24	E34	7-AB4-18
	25	E34B	7-AB4-18.4
	26-40	E34	7-AB4-18
	44	E35	7-AB4-18
	45	E34	7-AB4-18
	46-58,60-74	E34	7-AB4-18
	78	E35	7-AB4-18
	79-83	E34	7-AB4-18
	84-91,93-106	E34	7-AB4-18
	59,92	E34B	7-AB4-18.4

LICENSED PROFESSIONAL ENGINEER
LESLIE E. ROBERTSON
No. 34360
UNIVERSITY OF THE STATE OF NEW YORK

SKILLING - HELLE - CHRISTIANSEN - ROBERTSON Structural & Civil Engineers

PROJECT THE WORLD TRADE CENTER | TITLE DETAIL E1, E2, E3 & E4 | DATE 10-20-67

REVISIONS

1-3-68

10-15-68

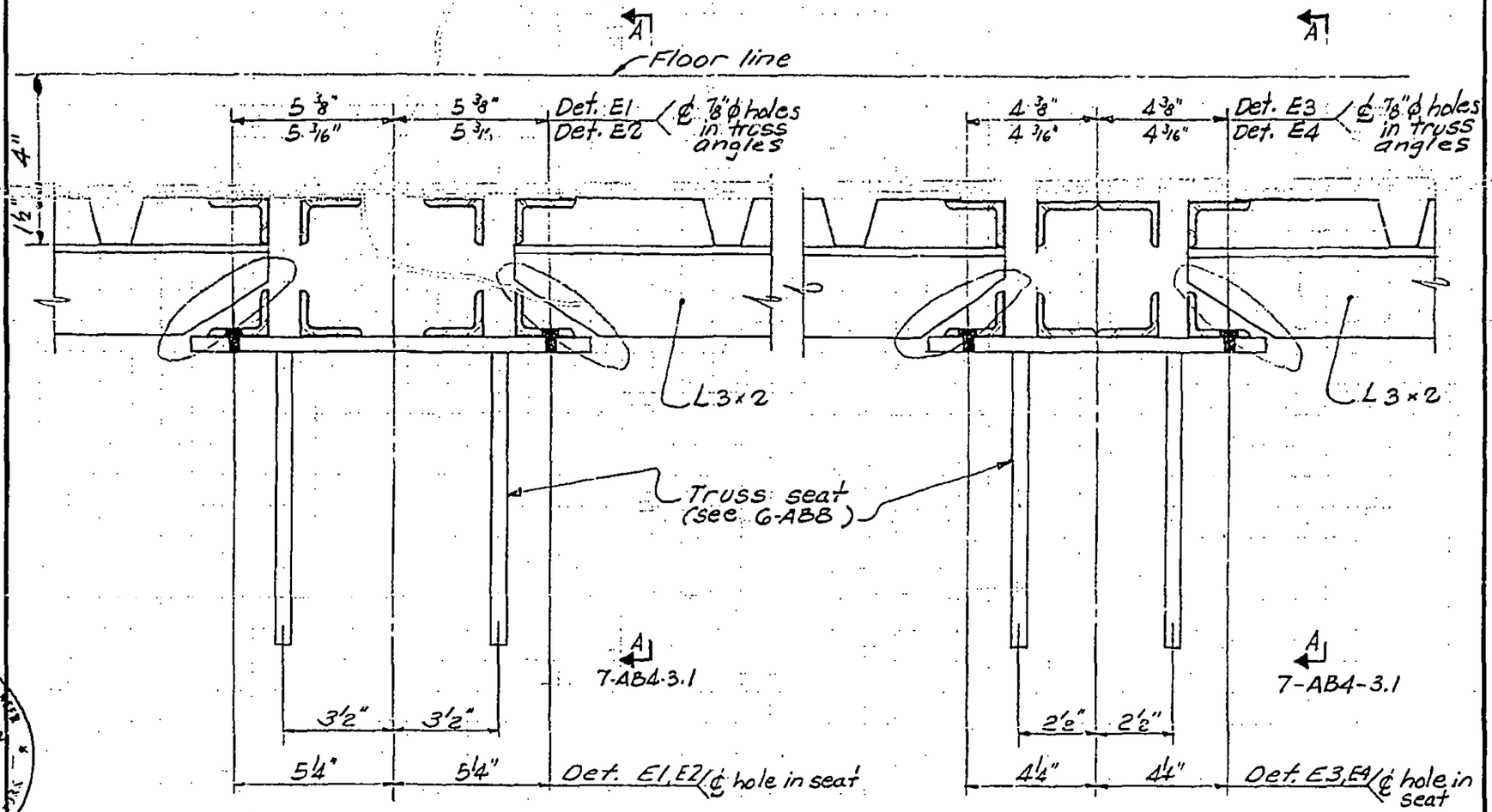

LICENSED PROFESSIONAL ENGINEER — LESLIE E. ROBERTSON — No. 34360 — UNIVERSITY OF THE STATE OF N.Y.

7-AB4-3

59

SKILLING - HELLE - CHRISTIANSEN - ROBERTSON Structural & Civil Engineers

PROJECT THE WORLD TRADE CENTER | TITLE DETAIL E1, E2, E3, E4, E5, E5A, E6 | DATE 10-20-67

REVISIONS

1-3-68

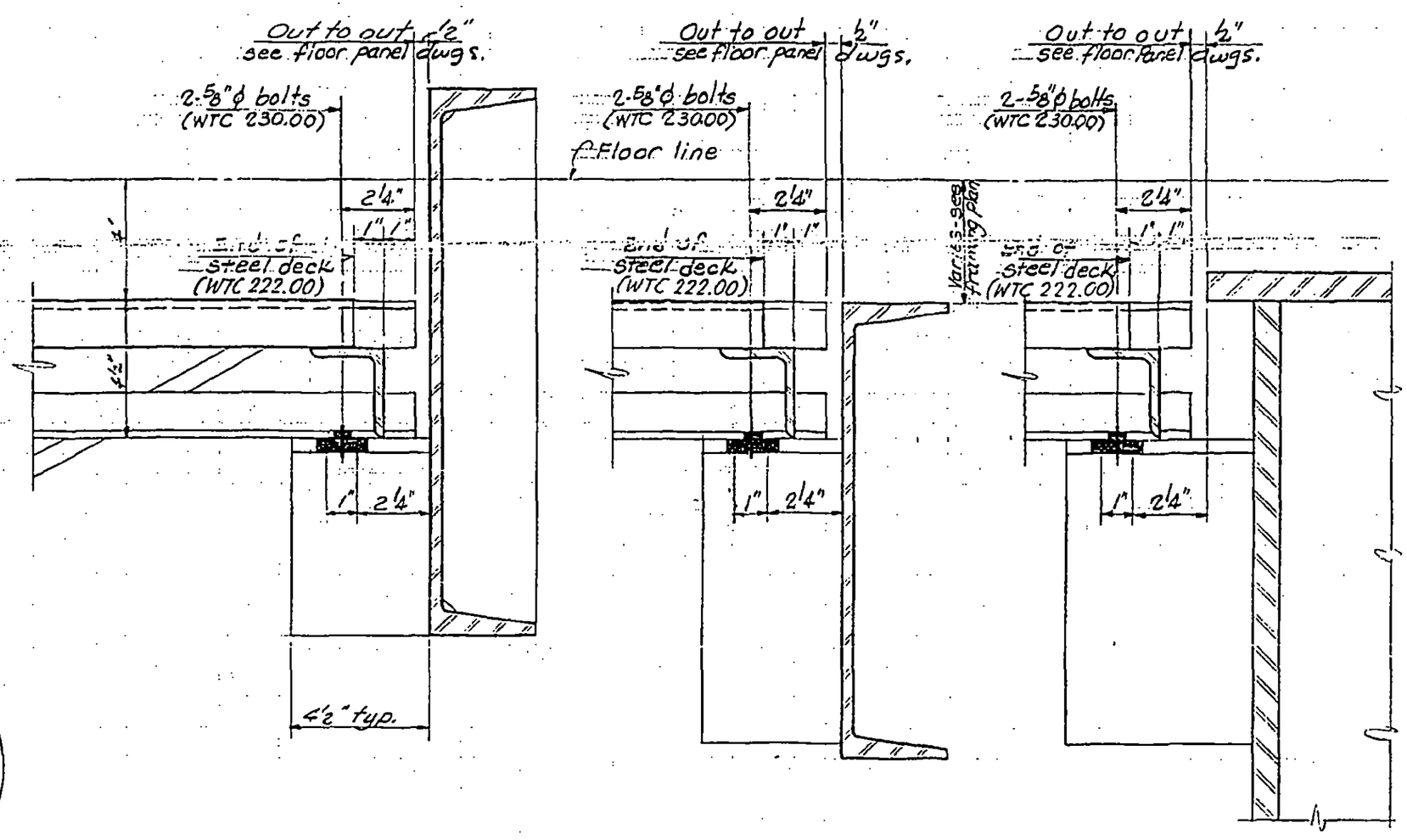

Section A-A
at upset channel

Section A-A
at channel

Section A-A
at box beam

LICENSED PROFESSIONAL ENGINEER
LESLIE E. ROBERTSON
No. 34360
UNIVERSITY OF THE STATE OF NEW YORK

7-AB4-3.1

6.0

SKILLING - HELLE - CHRISTIANSEN - ROBERTSON Structural & Civil Engineers

PROJECT THE WORLD TRADE CENTER | TITLE FLOOR PANEL-DETAIL E5 & E5A | DATE 10-20-67

REVISIONS

1-3-68

10-15-68

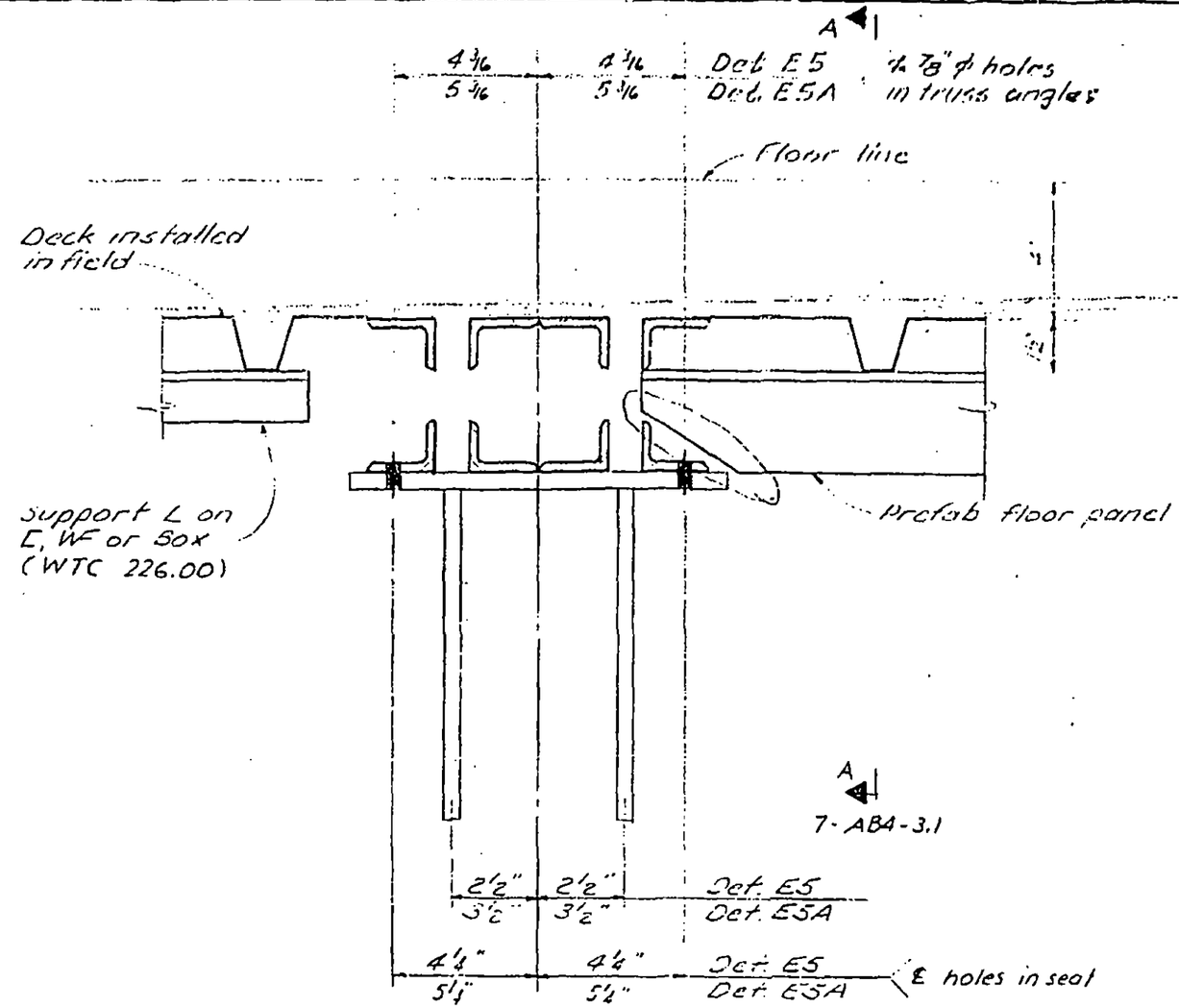

LICENSED PROFESSIONAL ENGINEER LESLIE E. ROBERTSON No. 34960 REGISTERED TO THE STATE OF NEW YORK

61

7-AB4-4

SKILLING - HELLE - CHRISTIANSEN - ROBERTSON Structural & Civil Engineers

PROJECT THE WORLD TRADE CENTER | TITLE FLOOR PANEL - DETAIL EG | DATE 1-3-68

REVISIONS

7-22-68

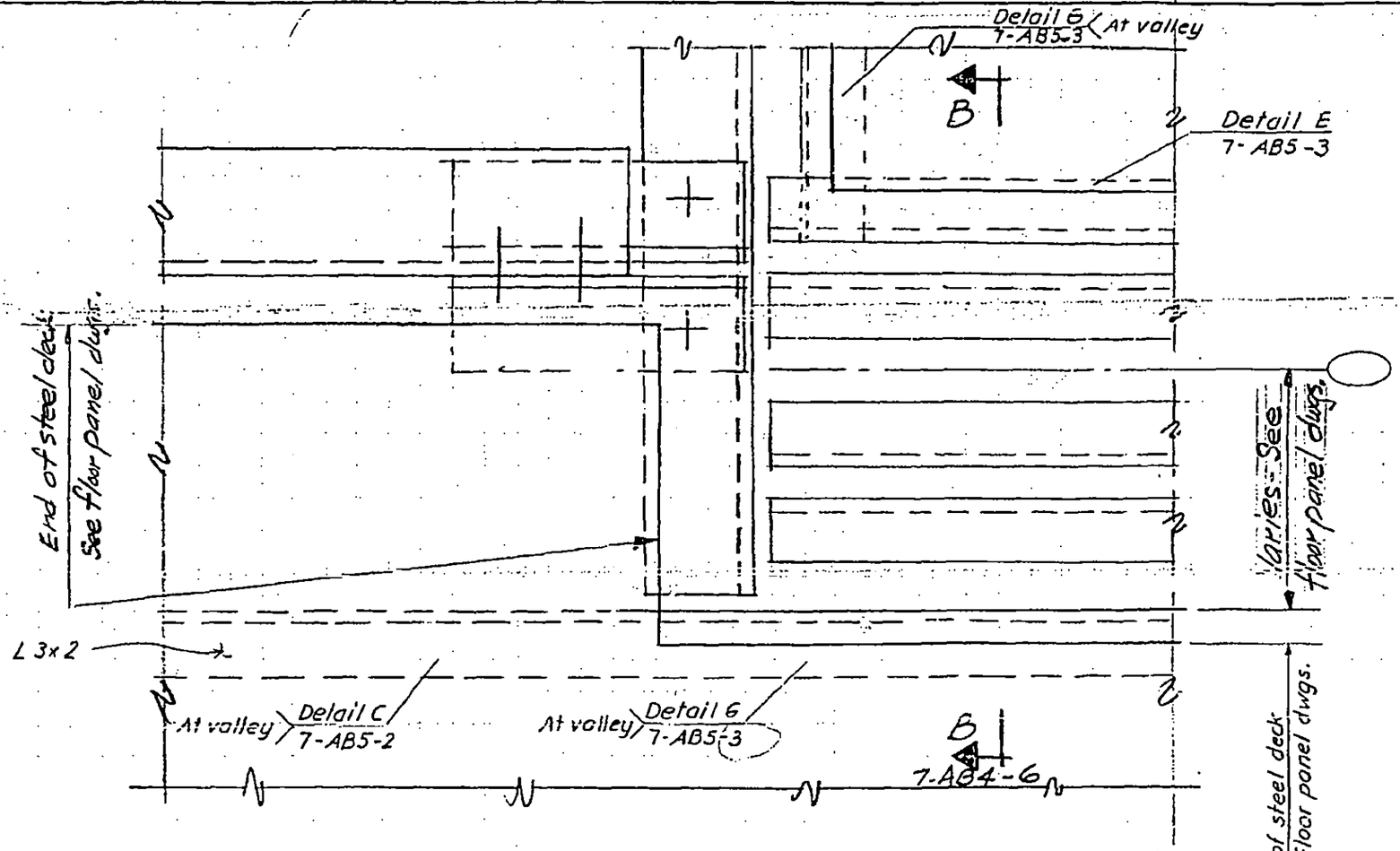

REGISTERED PROFESSIONAL ENGINEER
LESLIE E. ROBERTSON
NO. 30360
FOR THE STATE OF NEW YORK

7-AB4-5

SKILLING - HELLE - CHRISTIANSEN - ROBERTSON Structural & Civil Engineers

PROJECT THE WORLD TRADE CENTER | TITLE FLOOR PANEL DETAIL E6 | DATE 1-3-68

REVISIONS

10-15-68

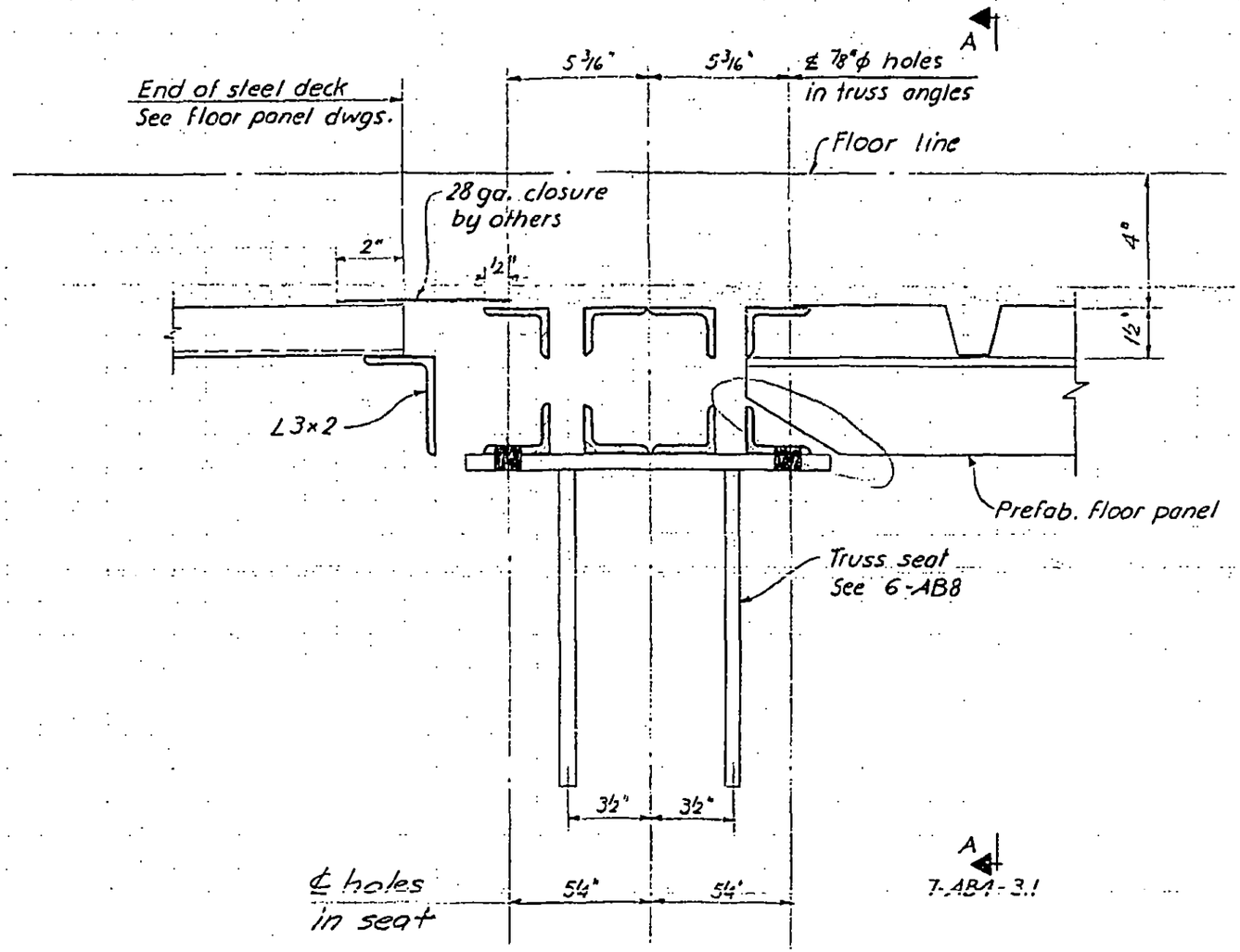

Section B-B

LICENSED PROFESSIONAL ENGINEER LESLIE E. ROBERTSON No. 34360 UNIVERSITY OF THE STATE OF NEW YORK

7-AB4-6

SKILLING - HELLE - CHRISTIANSEN - ROBERTSON Structural & Civil Engineers

PROJECT THE WORLD TRADE CENTER | TITLE FLOOR PANEL - DETAIL E8 | DATE 1-3-68

REVISIONS

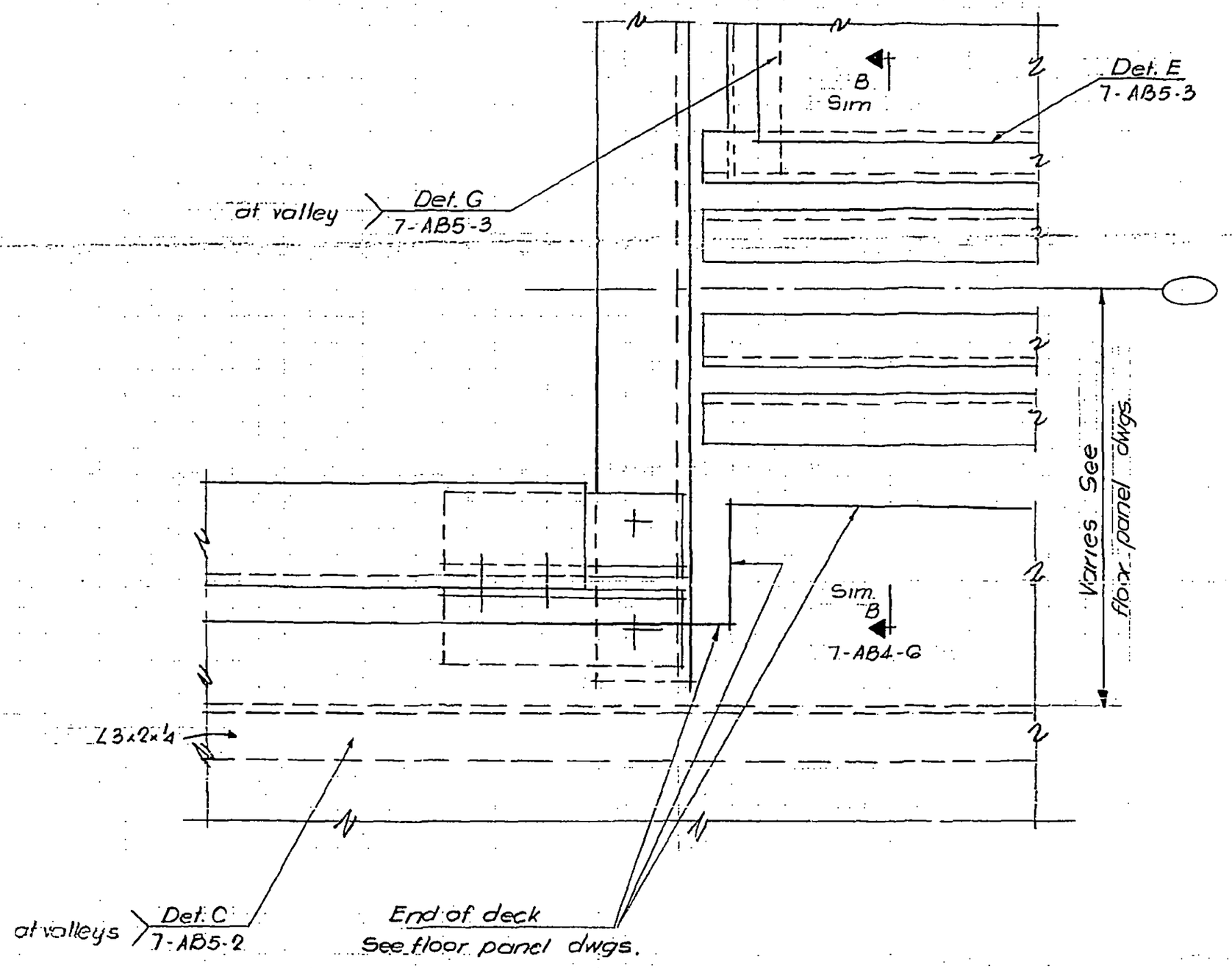

LICENSED PROFESSIONAL ENGINEER
LESLIE E. ROBERTSON
No. 34360
UNIVERSITY OF THE STATE OF N.Y.

64

7-AB4-7

SKILLING, HELLE, CHRISTIANSEN, ROBERTSON — Structural & Civil Engineers

PROJECT: THE WORLD TRADE CENTER | TITLE: FLOOR PANEL-DETAIL E9, E9A | DATE: 7-22-68

REVISIONS

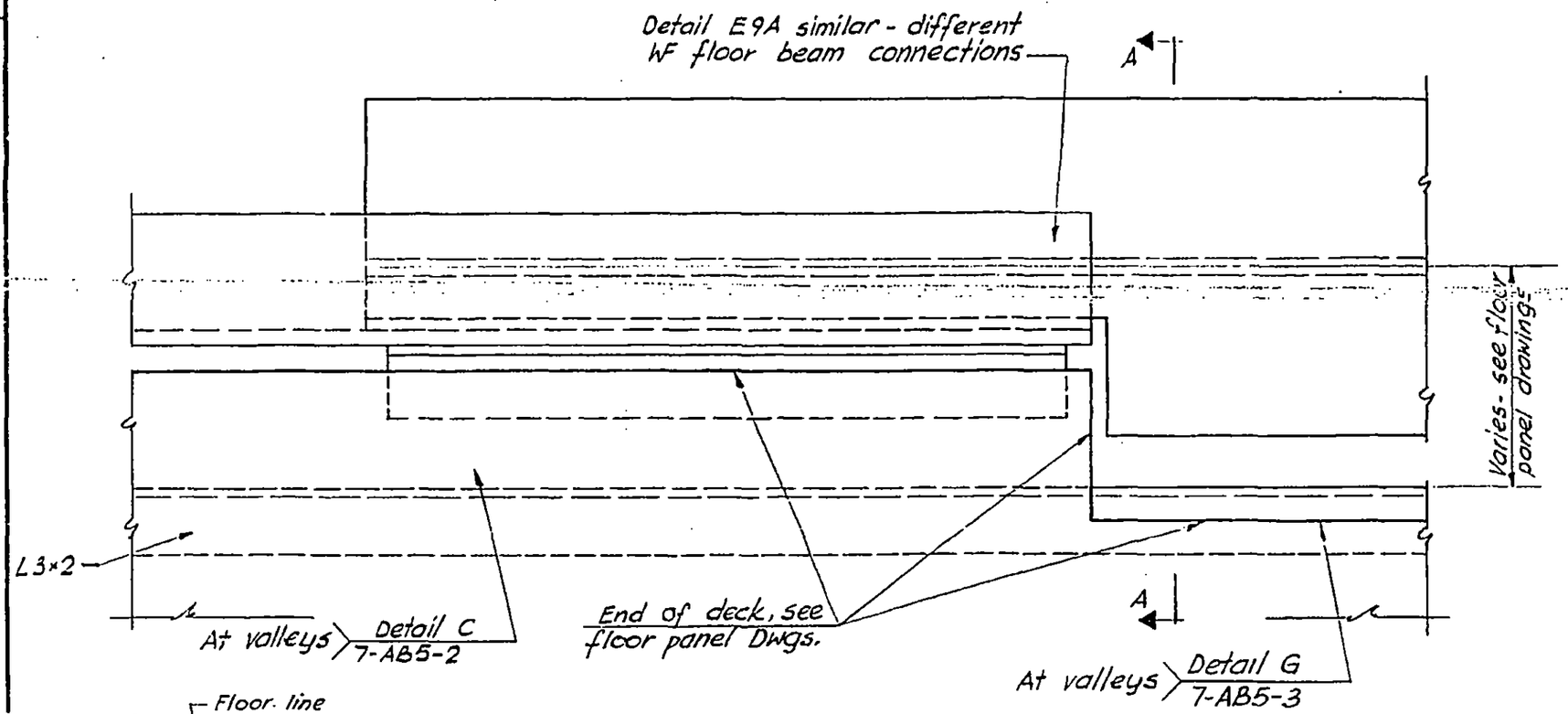

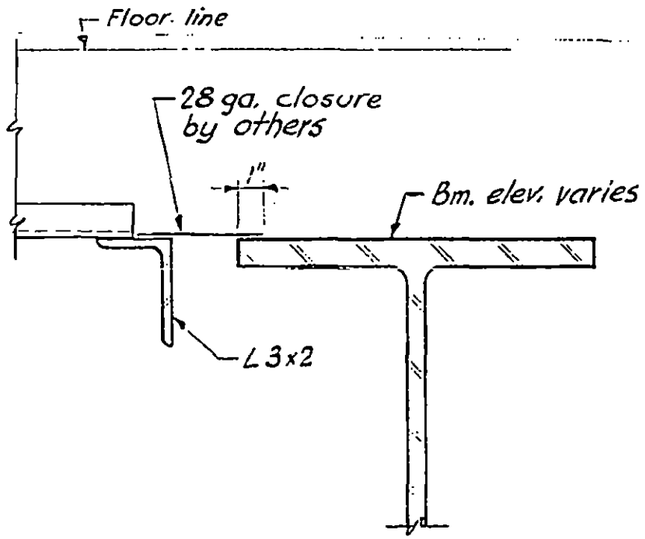

Section A-A

LICENSED PROFESSIONAL ENGINEER — LESLIE E. ROBERTSON — No. 34860 — UNIVERSITY OF THE STATE

DESIGNED

DRAWN

REVIEWED

55

7-AB4-8

SKILLING, HELLE, CHRISTIANSEN, ROBERTSON Structural & Civil Engineers

PROJECT THE WORLD TRADE CENTER | TITLE FLOOR PANEL - DETAIL E 10 | DATE 7-22-68

REVISIONS

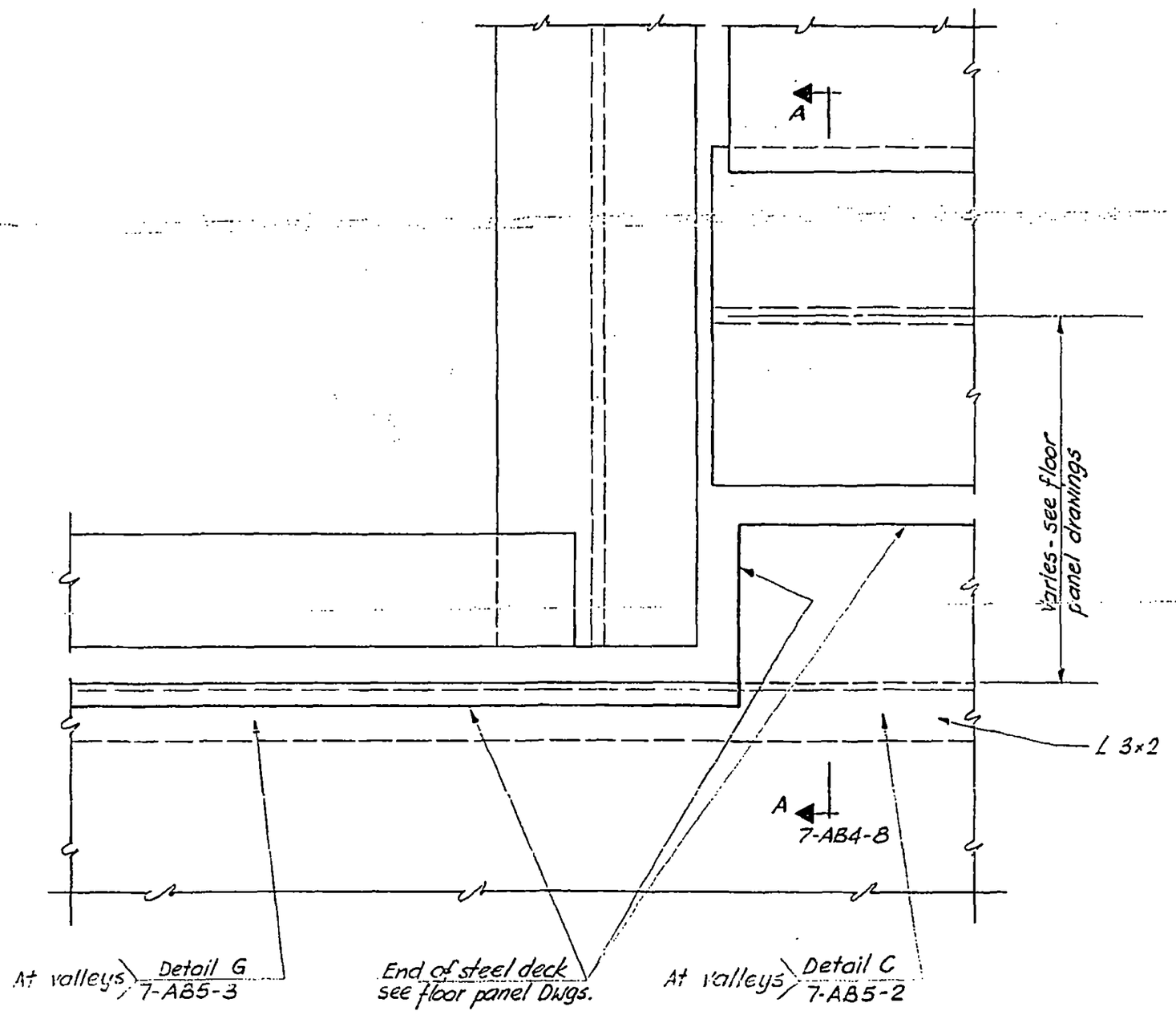

LICENSED PROFESSIONAL ENGINEER LESLIE E. ROBERTSON UNIVERSITY OF ...

DESIGNED

DRAWN

REVIEWED

56

7-AB4-9

SKILLING, HELLE, CHRISTIANSEN, ROBERTSON — Structural & Civil Engineers

PROJECT THE WORLD TRADE CENTER | TITLE FLOOR TRUSS - DETAIL E11 | DATE 8-15-68

REVISIONS

10-4-68
12-20-68

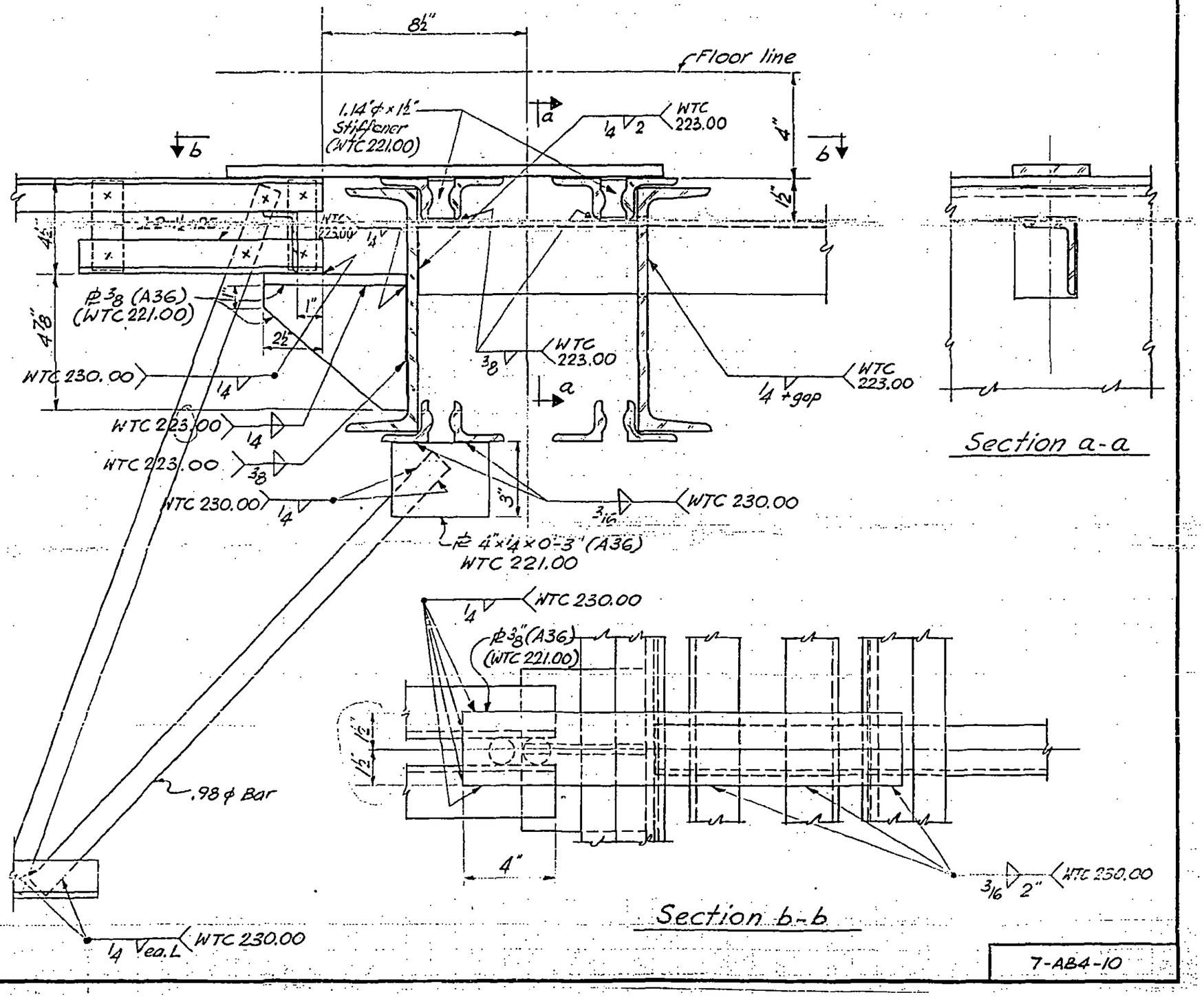

Section a-a

Section b-b

LICENSED PROFESSIONAL ENGINEER — LESLIE E. ROBERTSON — No. 34360 — UNIVERSITY OF THE STATE OF NEW YORK

DESIGNED

DRAWN

REVIEWED

7-AB4-10

SKILLING - HELLE - CHRISTIANSEN - ROBERTSON Structural & Civil Engineers

PROJECT THE WORLD TRADE CENTER | TITLE FLOOR TRUSS DETAIL E12 | DATE 1-3-68

REVISIONS

5-6-68
7-22-68

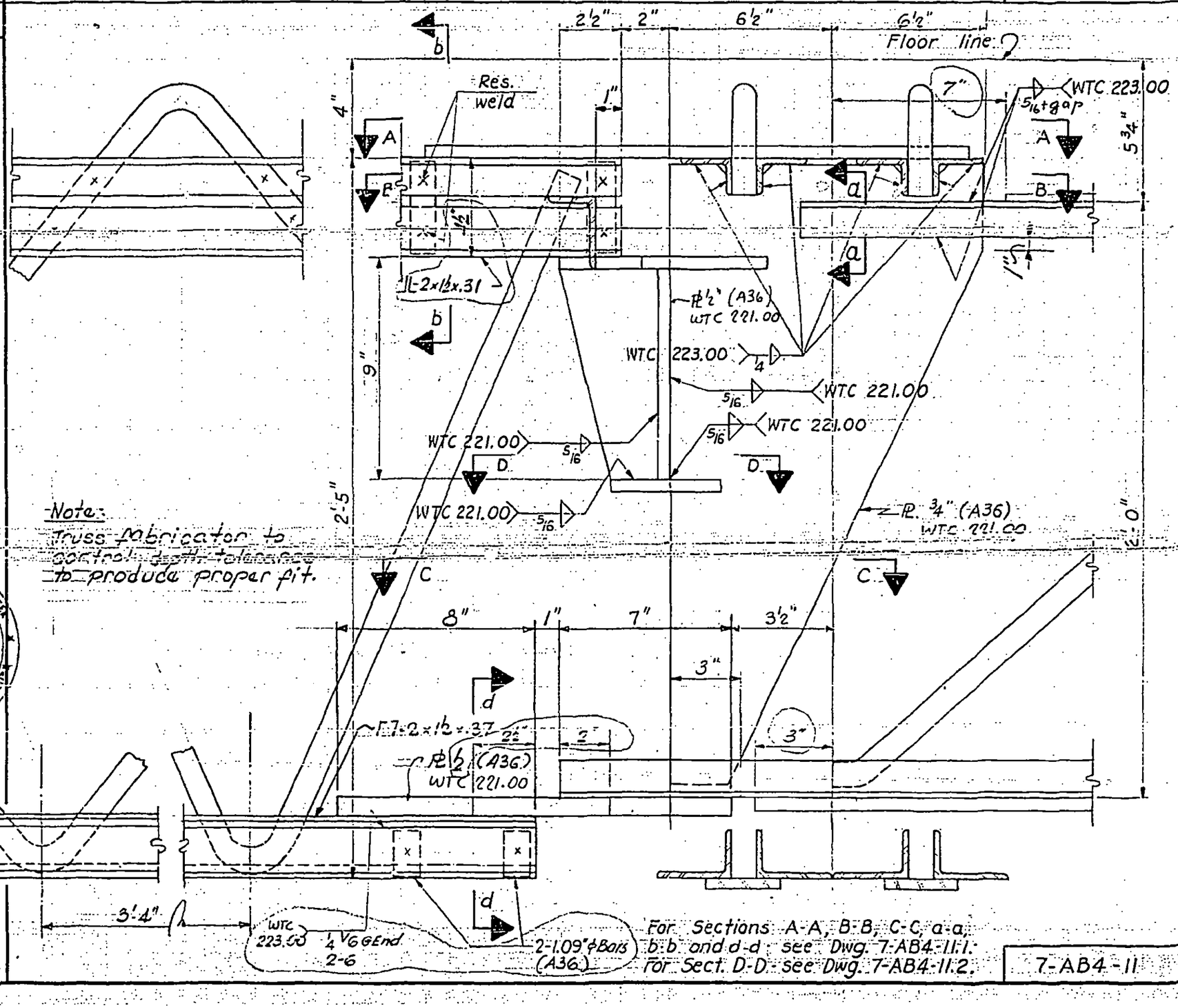

Note:
Truss fabricator to control depth tolerance to produce proper fit.

LICENSED PROFESSIONAL ENGINEER LESLIE E. ROBERTSON No. 34360 UNIVERSITY OF THE STATE OF NEW YORK

For Sections A-A, B-B, C-C, a-a, b-b and d-d see Dwg. 7-AB4-11.1.
For Sect. D-D see Dwg. 7-AB4-11.2.

7-AB4-11

57

SKILLING - HELLE - CHRISTIANSEN - ROBERTSON Structural & Civil Engineers

PROJECT THE WORLD TRADE CENTER | TITLE FLOOR TRUSS DETAIL E12, E13 | DATE 5-6-68

REVISIONS

7-22-68

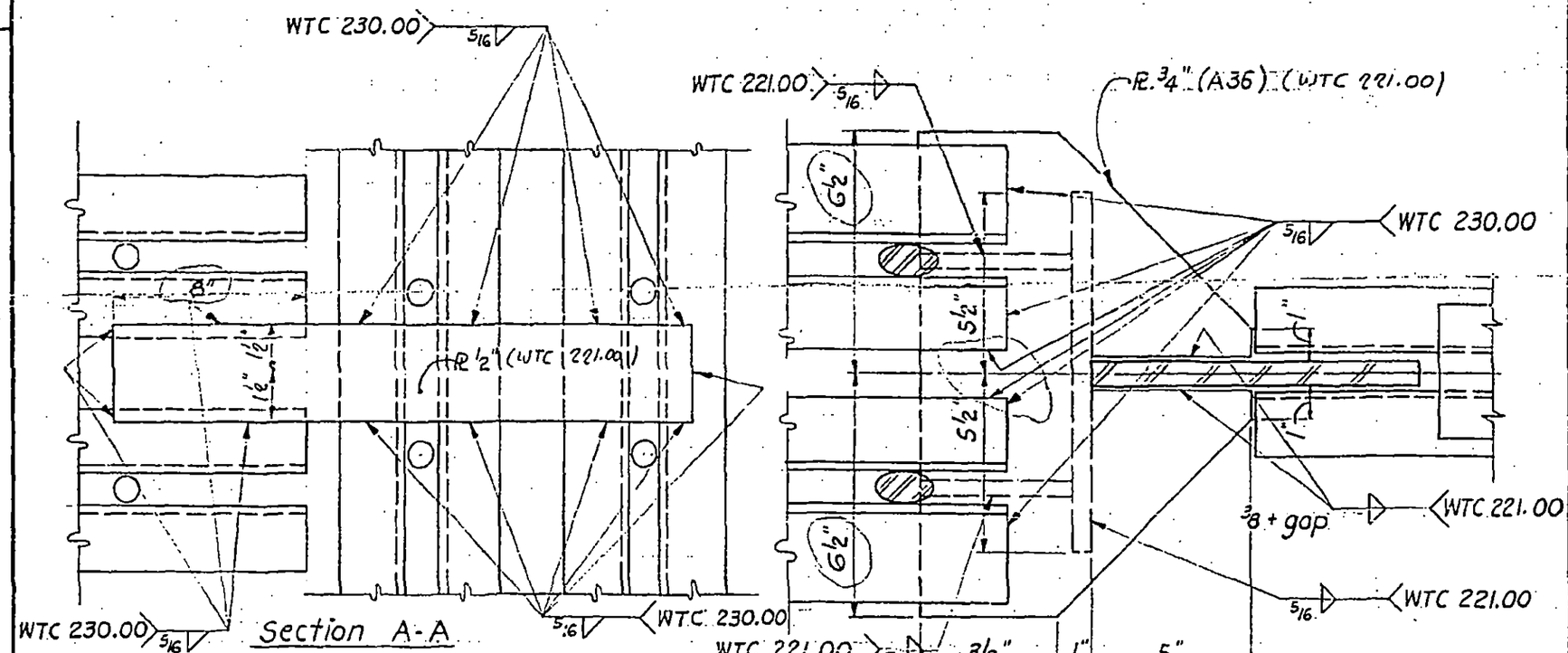

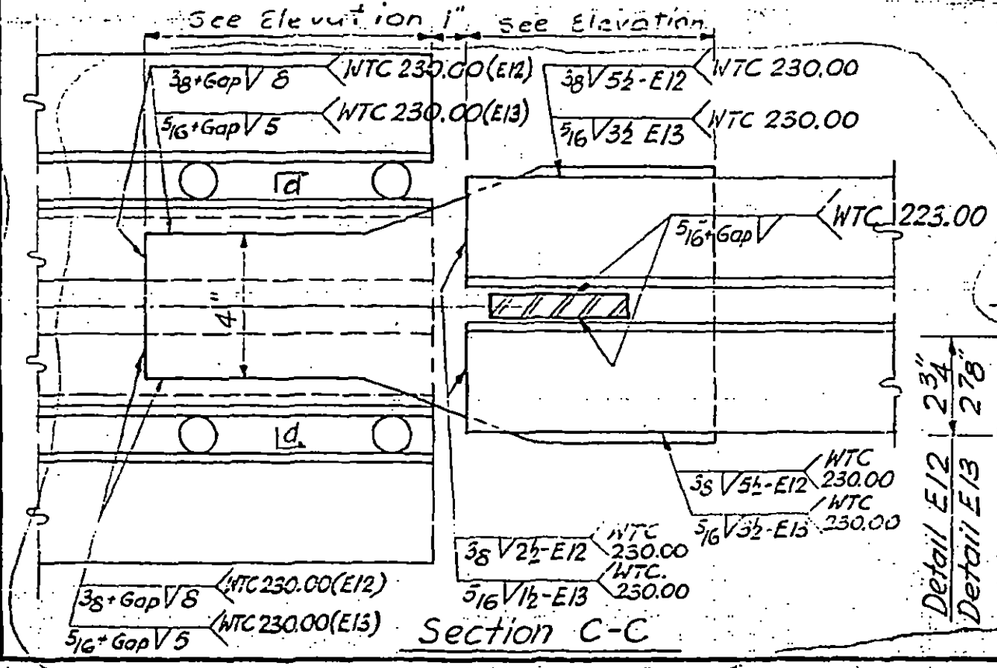

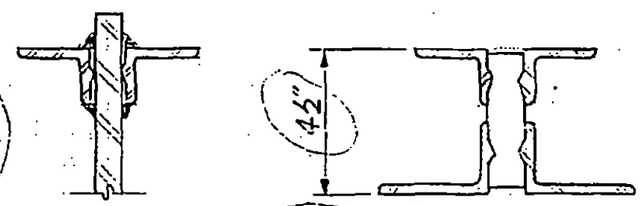

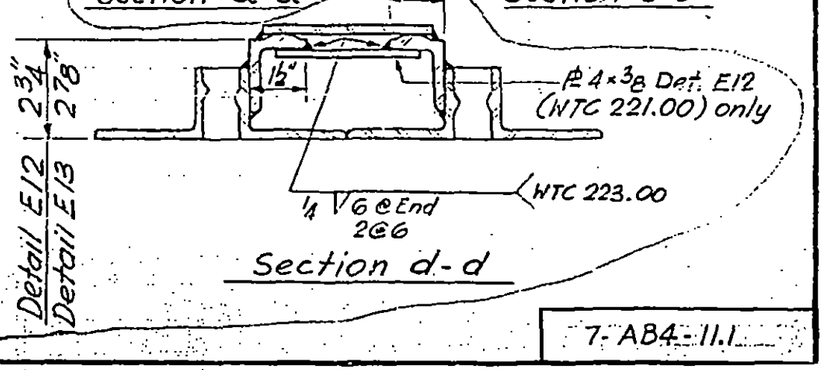

LICENSED PROFESSIONAL ENGINEER
LESLIE E. ROBERTSON
NEW YORK

7-AB4-11.1

58

SKILLING - HELLE - CHRISTIANSEN - ROBERTSON Structural & Civil Engineers

PROJECT THE WORLD TRADE CENTER | TITLE FLOOR TRUSS DETAIL E13 | DATE 5-6-68

REVISIONS

7-22-68

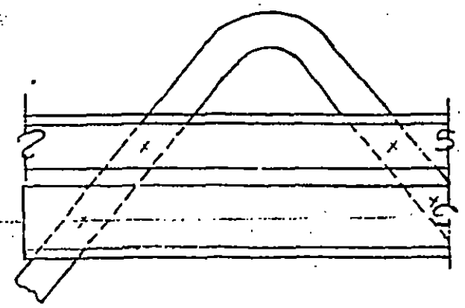

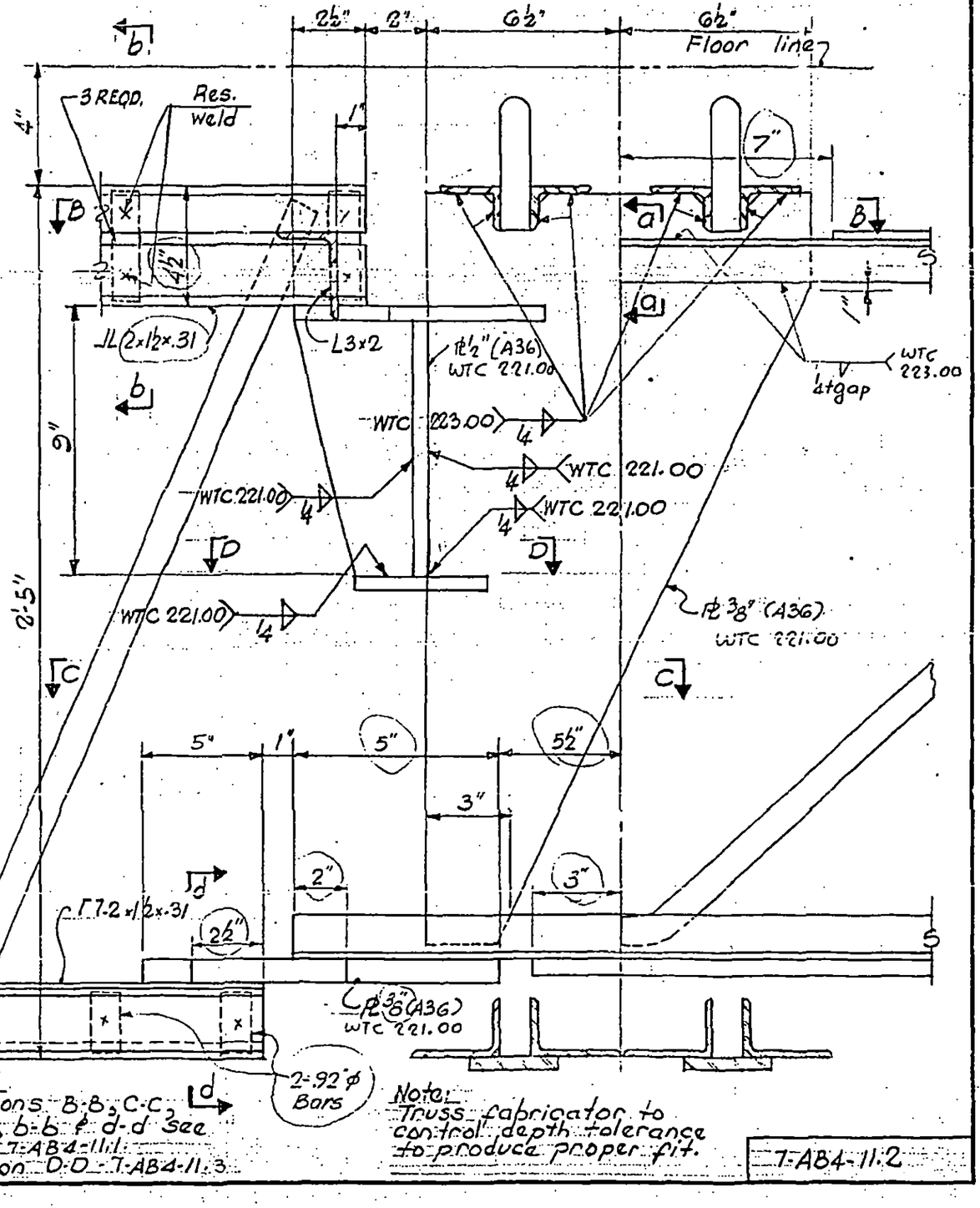

Note:
Sections B-B, C-C, a-a, b-b & d-d see dwg. T-AB4-11.1
Section D-D T-AB4-11.3

Note:
Truss fabricator to control depth tolerance to produce proper fit.

T-AB4-11.2

LICENSED PROFESSIONAL ENGINEER
LESLIE E. ROBERTSON
NEW YORK

SKILLING - HELLE - CHRISTIANSEN - ROBERTSON Structural & Civil Engineers

PROJECT THE WORLD TRADE CENTER | TITLE FLOOR TRUSS DETAIL E12, E13, E17, E18 | DATE 5-6-68

REVISIONS

7-22-68

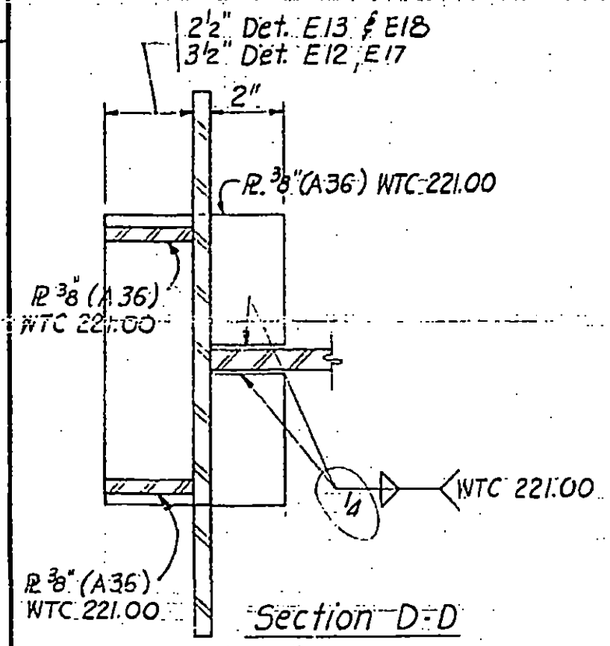

Section D-D

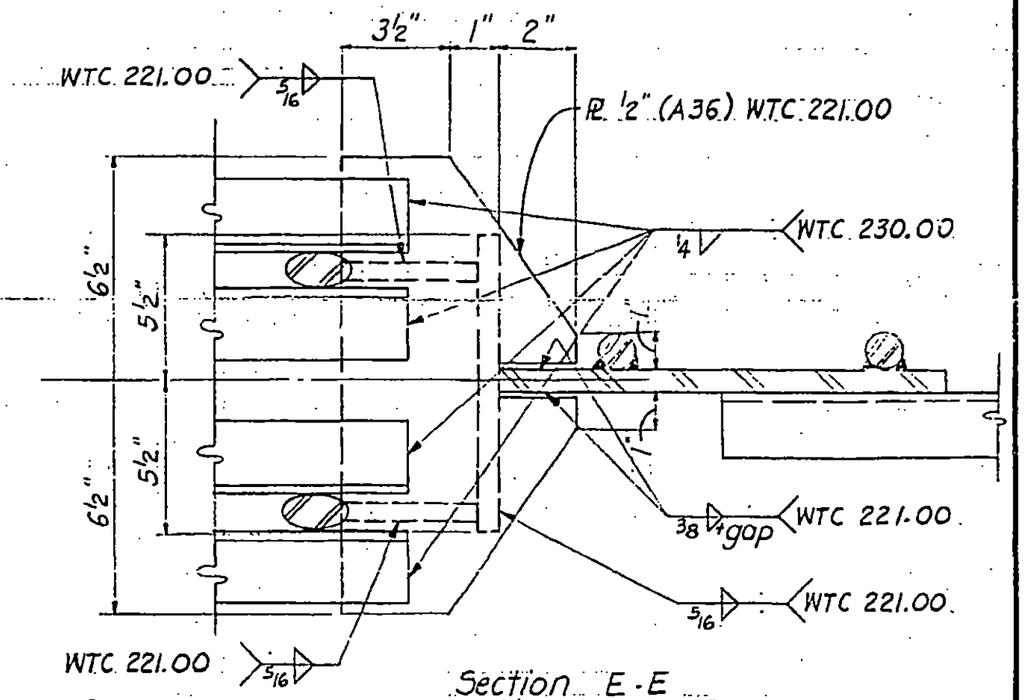

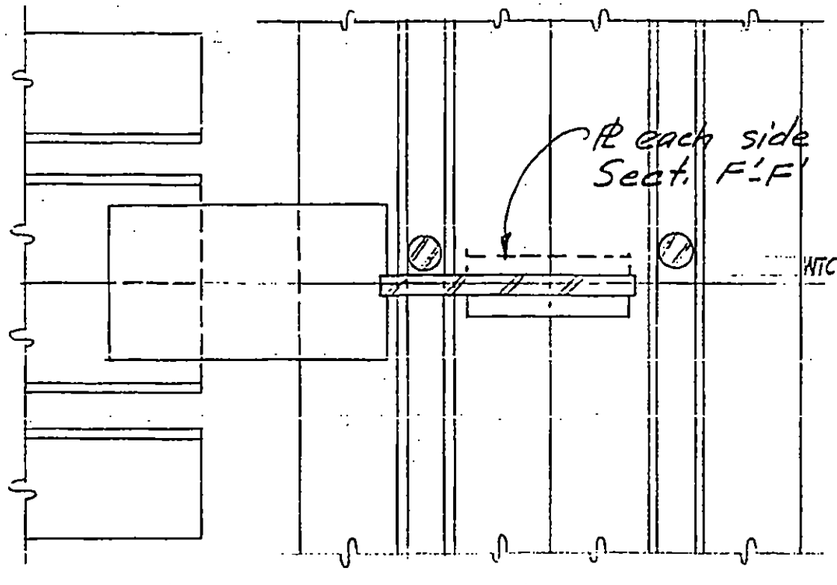

Section F-F
Section F-F as noted

Section E-E

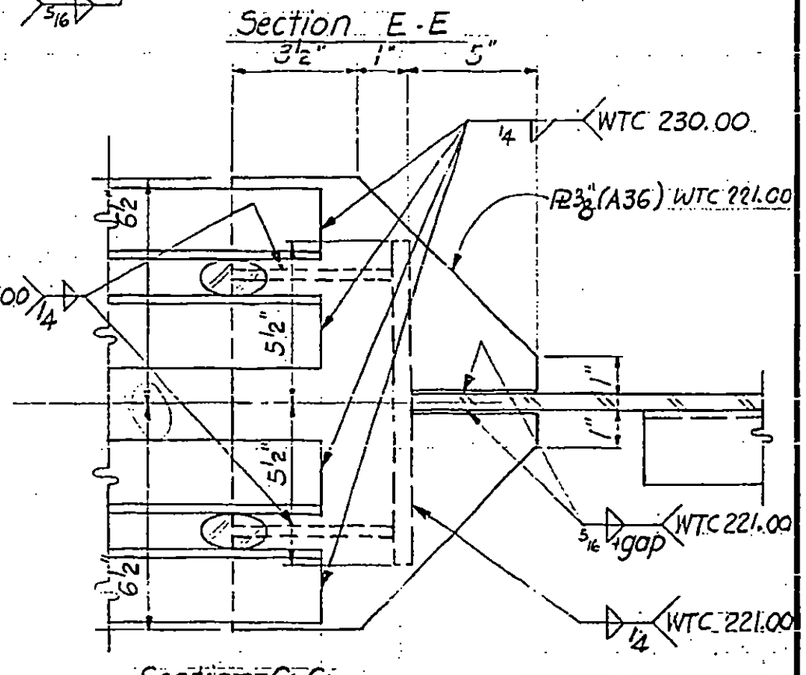

Section G-G

7-AB4-11.3

LICENSED PROFESSIONAL ENGINEER
LESLIE E. ROBERTSON
UNIVERSITY OF THE STATE OF NEW YORK
NO.

SKILLING - HELLE - CHRISTIANSEN - ROBERTSON Structural & Civil Engineers

PROJECT THE WORLD TRADE CENTER | TITLE FLOOR TRUSSES - DETAIL E16 | DATE 1-3-68

REVISIONS

5-6-68

7-22-68

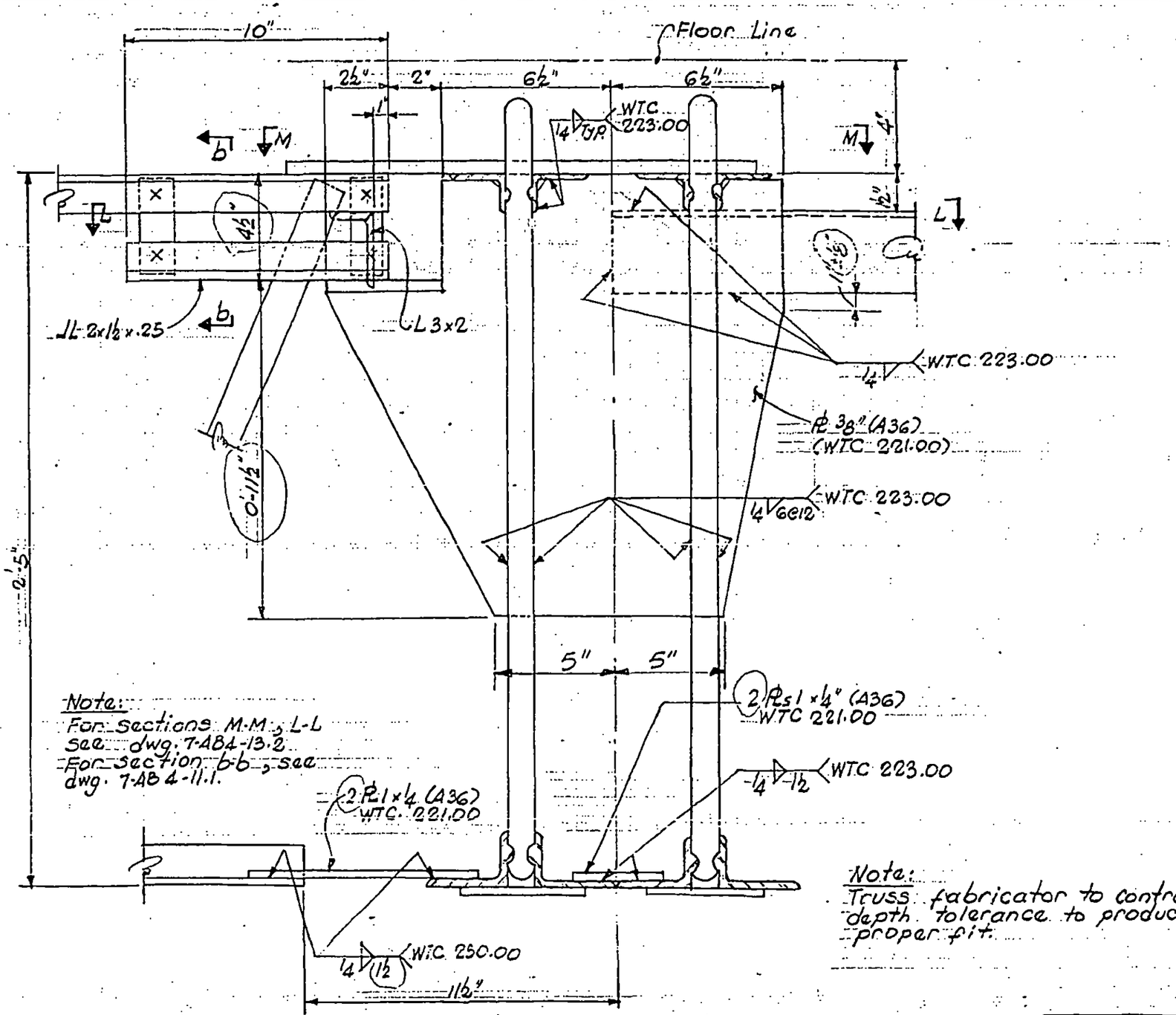

Note:
For sections M-M, L-L see dwg. 7-AB4-13.2
For section b-b, see dwg. 7-AB4-11.1.

Note:
Truss fabricator to control depth tolerance to produce proper fit.

LICENSED PROFESSIONAL ENGINEER LESLIE E. ROBERTSON No. 34800 UNIVERSITY OF THE STATE OF NEW YORK

7-AB4-12

61

SKILLING - HELLE - CHRISTIANSEN - ROBERTSON Structural & Civil Engineers

PROJECT THE WORLD TRADE CENTER | TITLE FLOOR TRUSS DETAIL E17 | DATE 1-3-68

REVISIONS

5-6-68
7-22-68

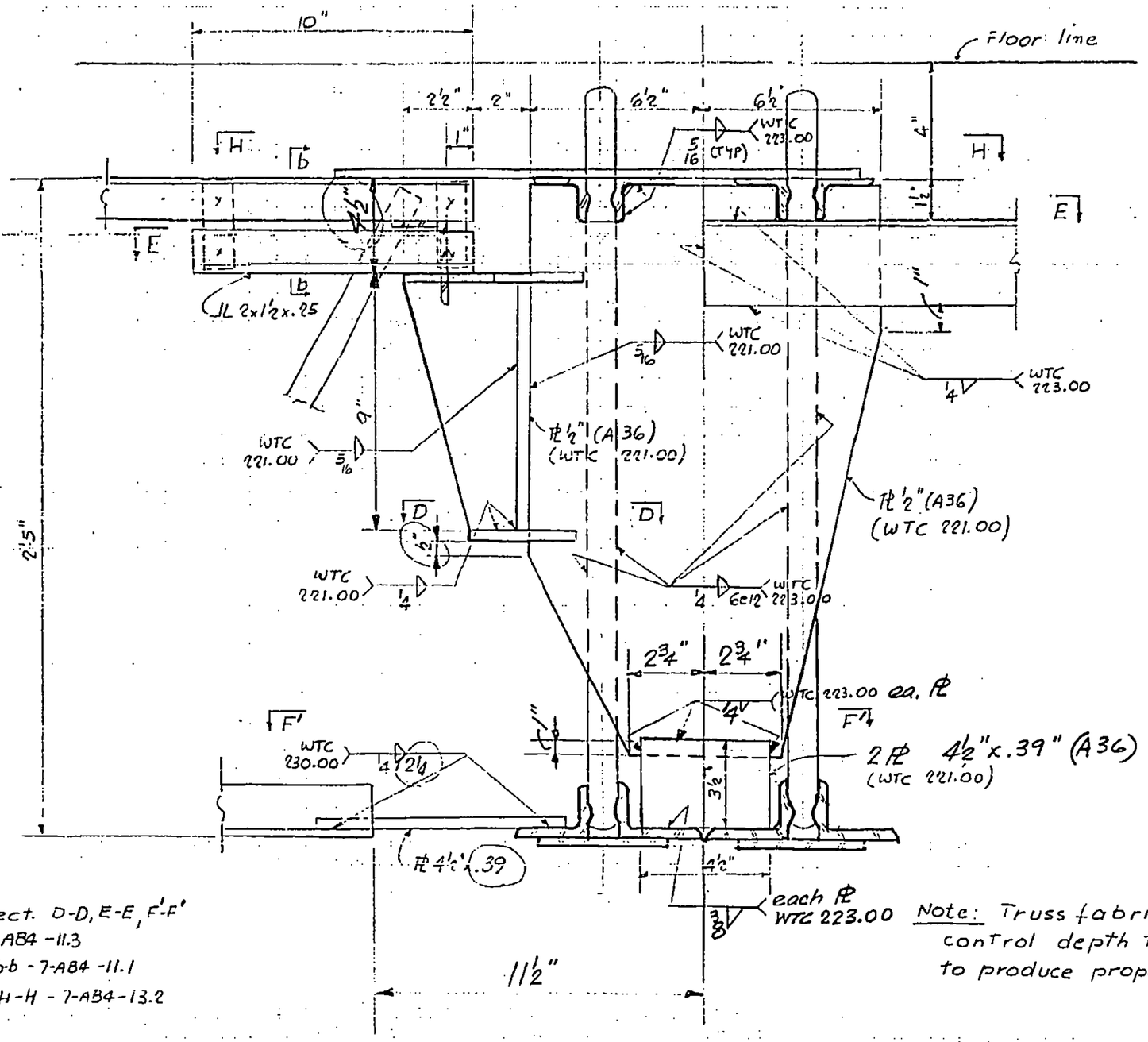

For Sect. D-D, E-E, F-F'
See 7-AB4-11.3
Sect. b-b - 7-AB4-11.1
Sect. H-H - 7-AB4-13.2

Note: Truss fabricator to control depth tolerance to produce proper fit.

LICENSED PROFESSIONAL ENGINEER
LESLIE E. ROBERTSON
NEW YORK

7-AB4-13

SKILLING - HELLE - CHRISTIANSEN - ROBERTSON Structural & Civil Engineers

PROJECT THE WORLD TRADE CENTER | TITLE FLOOR TRUSSES DETAIL E 18 | DATE 5-6-68

REVISIONS

7-22-68

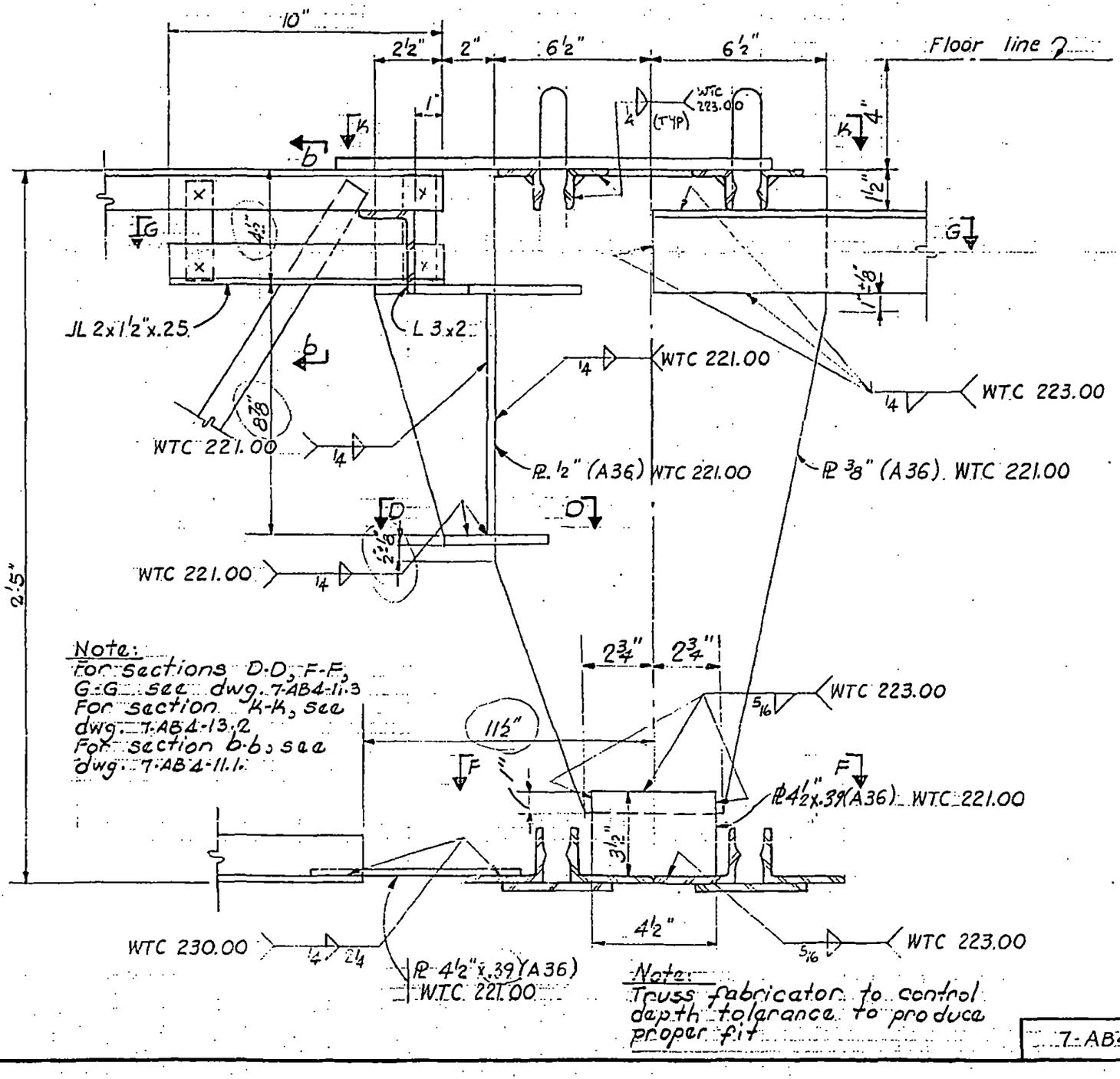

Note:
for sections D-D, F-F, G-G see dwg. 7-AB4-11.3
For section K-K, see dwg. 7-AB4-13.2
For section b-b, see dwg. 7-AB4-11.1.

Note:
Truss fabricator to control depth tolerance to produce proper fit

7-AB4-13.1

LICENSED PROFESSIONAL ENGINEER LESLIE E. ROBERTSON

63

SKILLING - HELLE - CHRISTIANSEN - ROBERTSON Structural & Civil Engineers

PROJECT THE WORLD TRADE CENTER | TITLE FLOOR TRUSSES - DETAILS E17, E18, E16 | DATE 5-6-68

REVISIONS

7-22-68
10-15-68

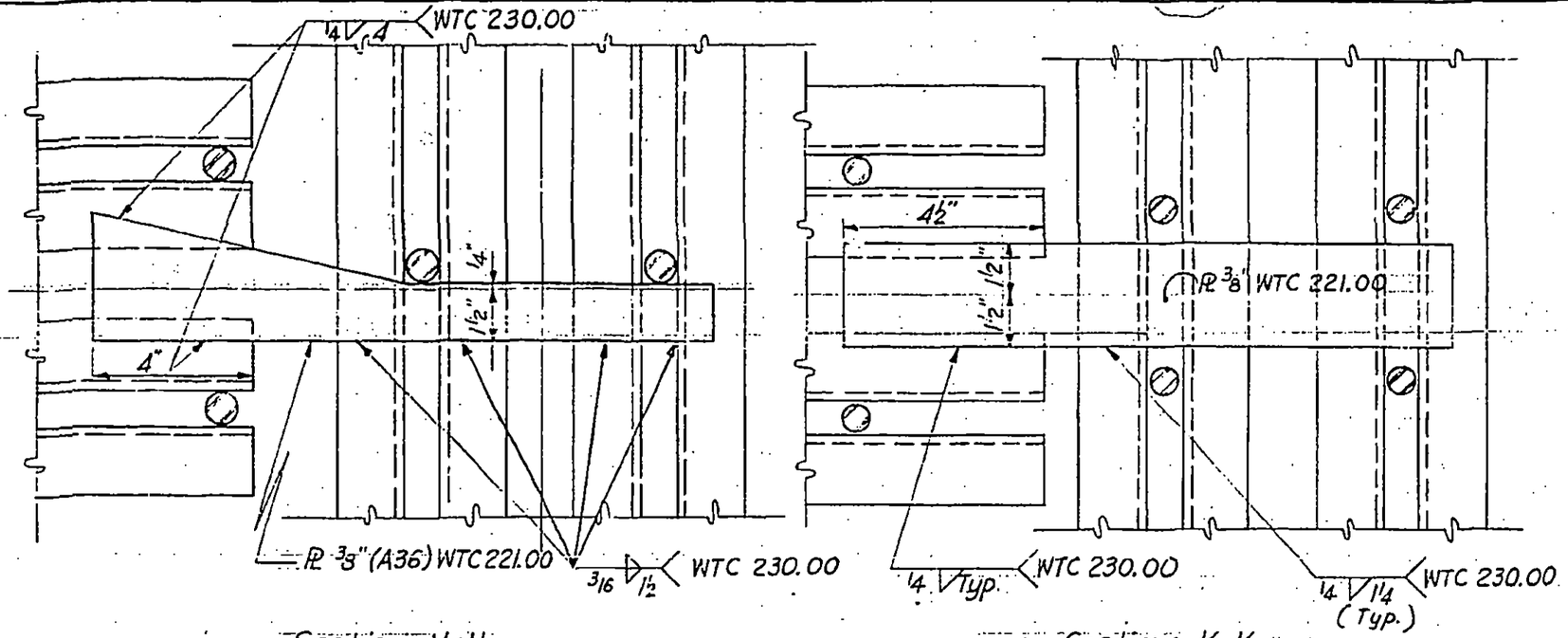

Section H-H

Section K-K

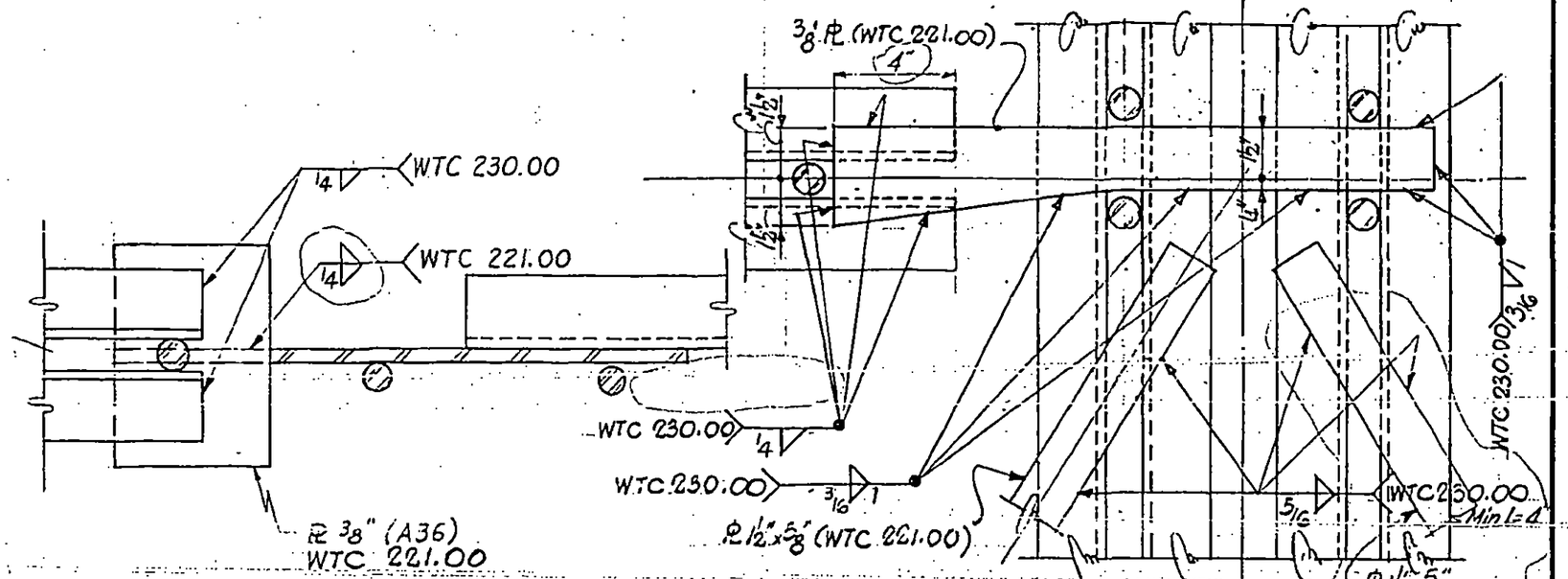

Section L-L

Section M-M

7-AB4-13.2

LICENSED PROFESSIONAL ENGINEER LESLIE E. ROBERTSON No. 34803 STATE OF NEW YORK

WTCI-1056-LERA-2

SKILLING - HELLE - CHRISTIANSEN - ROBERTSON — Structural & Civil Engineers

PROJECT THE WORLD TRADE CENTER | TITLE FLOOR PANEL DETAIL E19, E21, E22 | DATE 1-3-68

REVISIONS

10-15-68

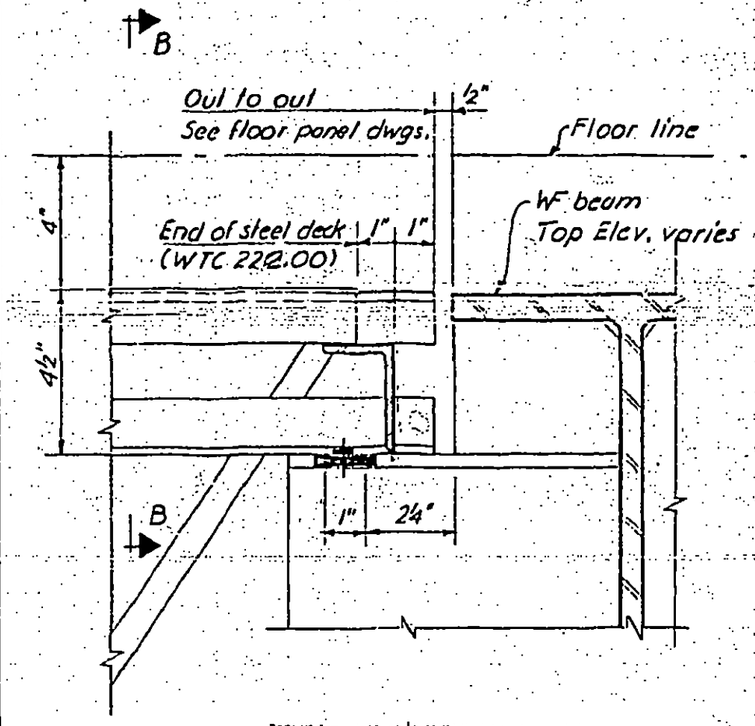

Section A-A

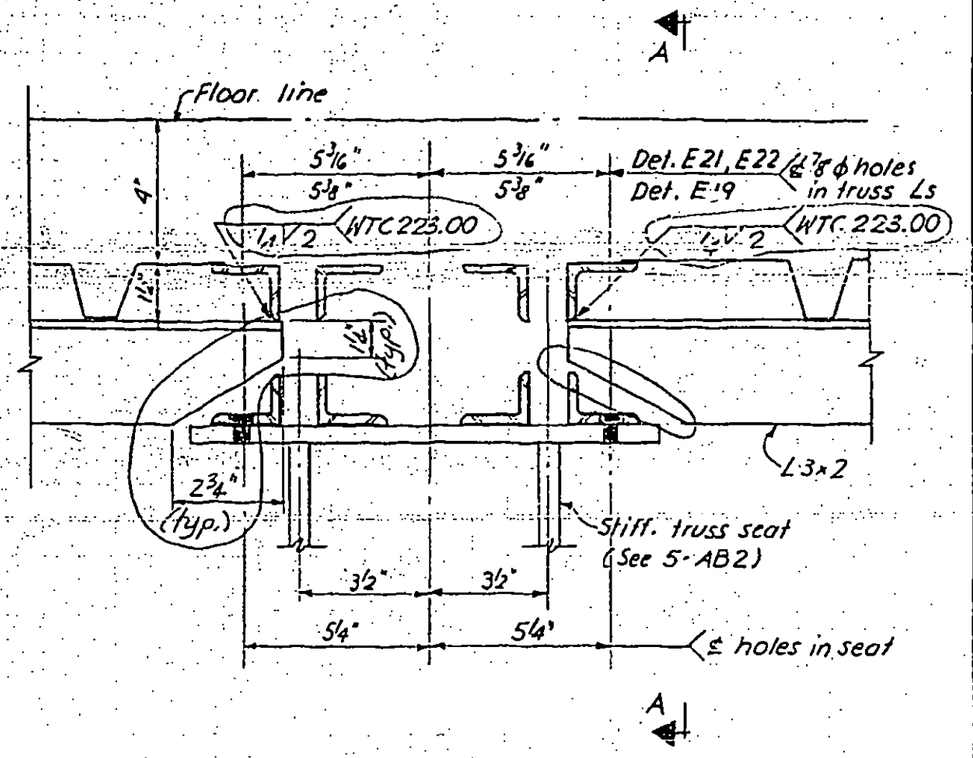

Section B-B

LICENSED PROFESSIONAL ENGINEER
LESLIE E. ROBERTSON
No. 34360
UNIVERSITY OF THE STATE OF NEW YORK

7-AB4-19

SKILLING - HELLE - CHRISTIANSEN - ROBERTSON Structural & Civil Engineers

PROJECT THE WORLD TRADE CENTER | TITLE FLOOR PANEL DETAIL - E20 | DATE 1-3-68

REVISIONS

7-22-68
10-15-68

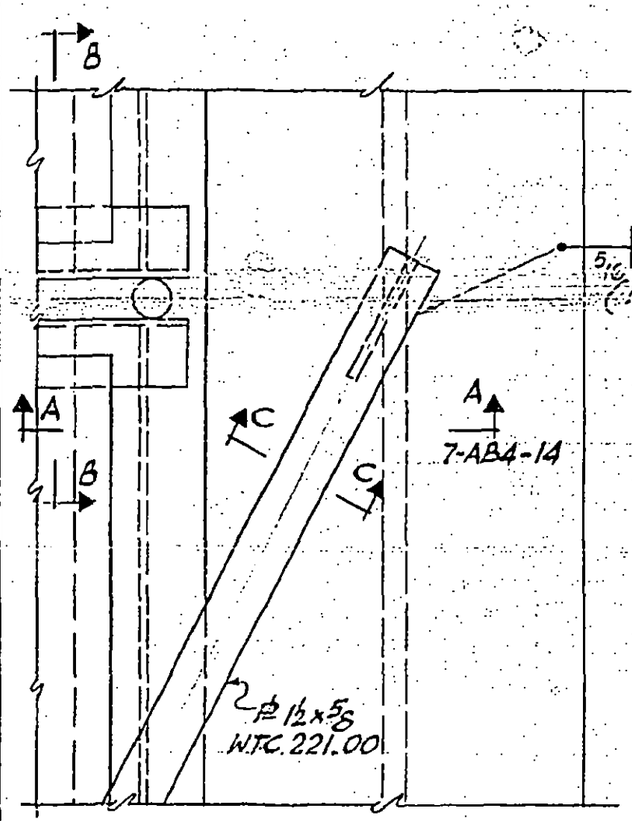

PLAN

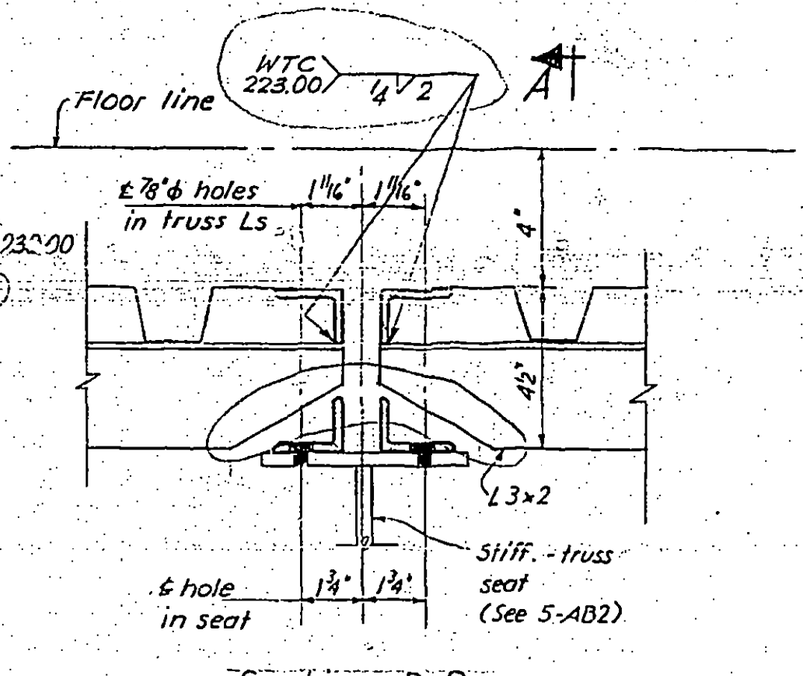

Section B-B

A4
7-AB4-14

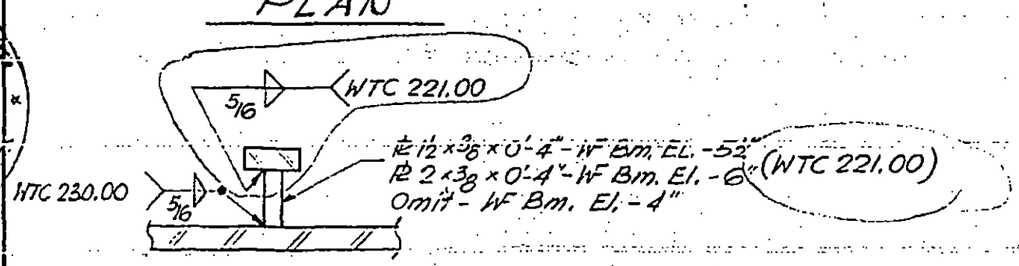

Section C-C

LICENSED PROFESSIONAL ENGINEER
LESLIE E. ROBERTSON
No. 34360
UNIVERSITY OF THE STATE OF NEW YORK

66

7-AB4-14.1

SKILLING - HELLE - CHRISTIANSEN - ROBERTSON Structural & Civil Engineers

PROJECT THE WORLD TRADE CENTER | TITLE FLOOR PANEL-DETAIL E 23 & E 24 | DATE 10-27-67

REVISIONS

1-3-68
5-6-68
7-22-68

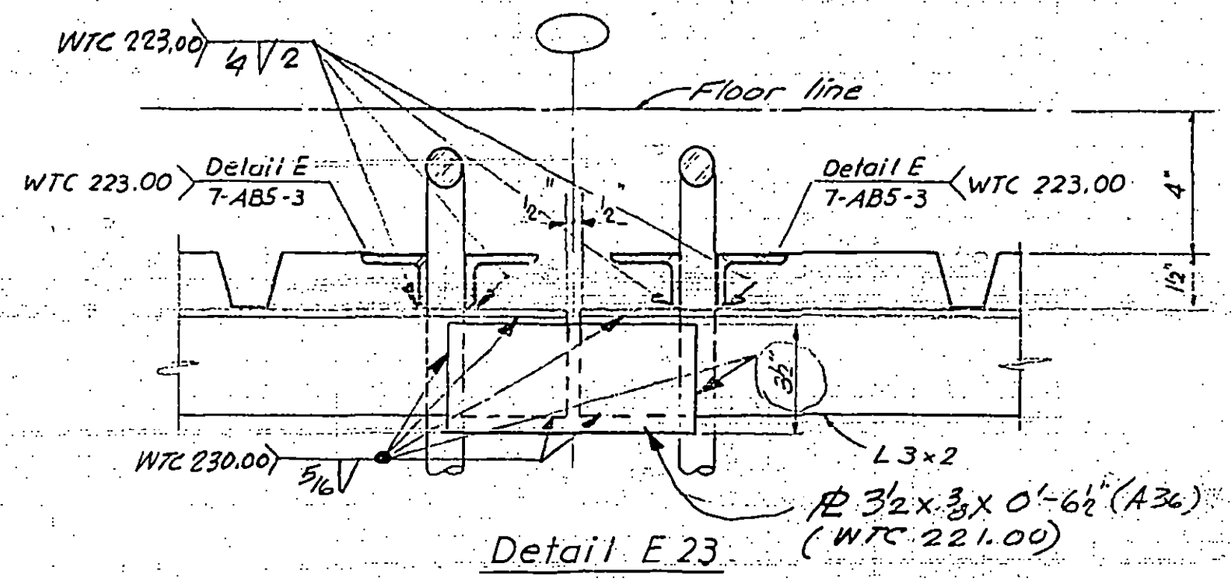

Detail E 23

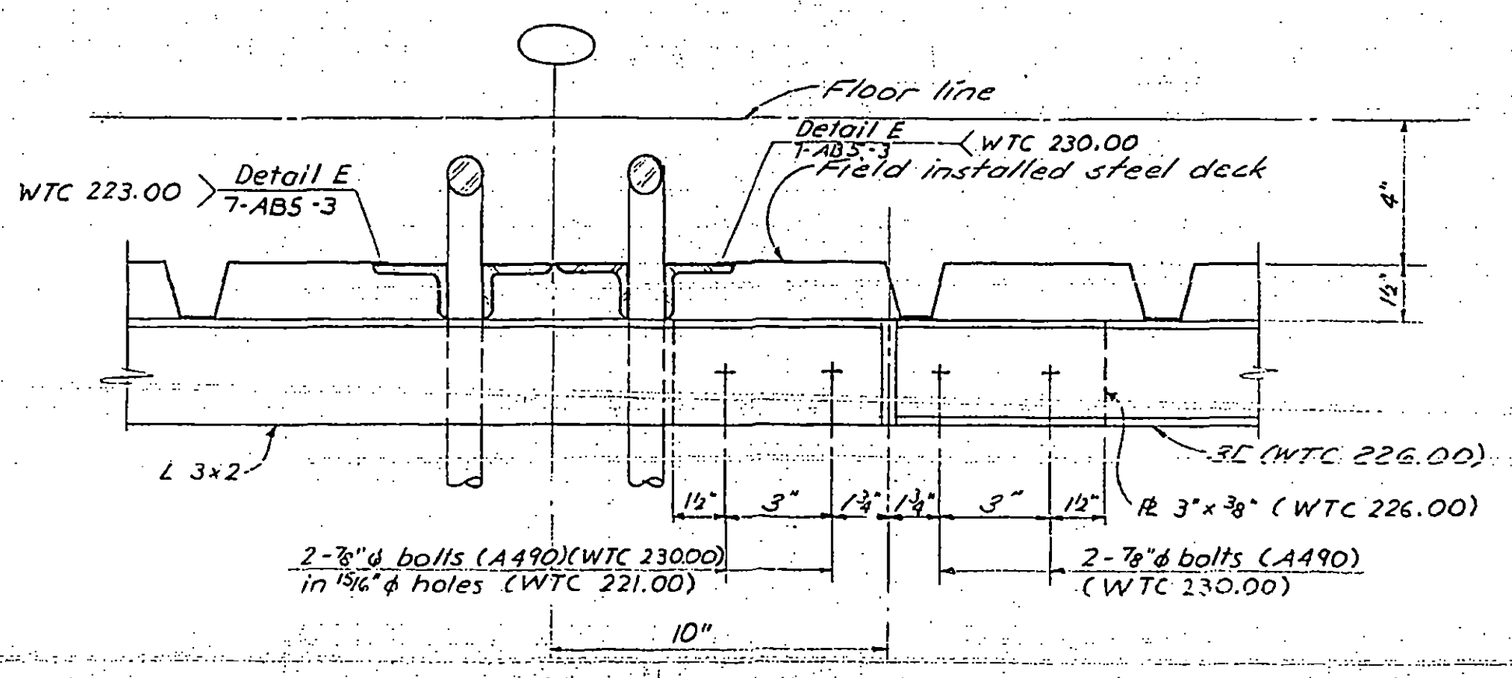

Detail E 24

LICENSED PROFESSIONAL ENGINEER
LESLIE E. ROBERTSON
No. 34360
UNIVERSITY OF THE STATE OF NEW YORK

7-AB4-15

SKILLING - HELLE - CHRISTIANSEN - ROBERTSON Structural & Civil Engineers

PROJECT THE WORLD TRADE CENTER | TITLE FLOOR PANEL - DETAIL E 26 & E 26 B | DATE 10-27-67

REVISIONS

8-1-68
10-4-68

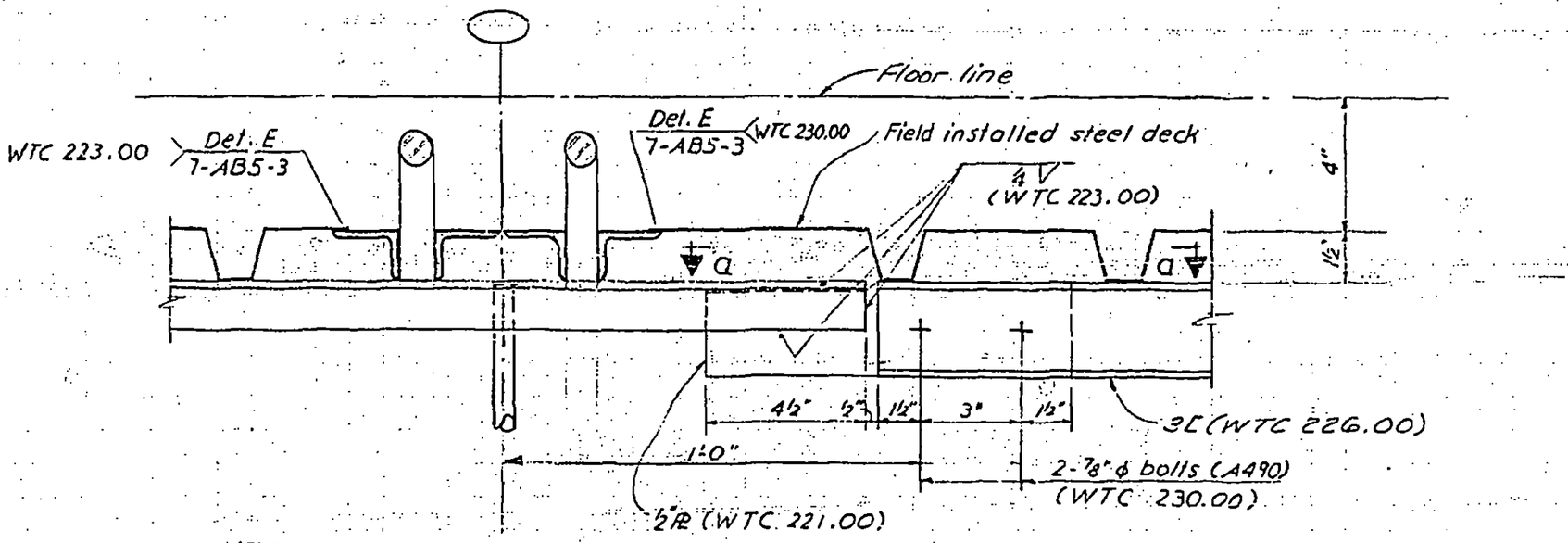

Detail E 25

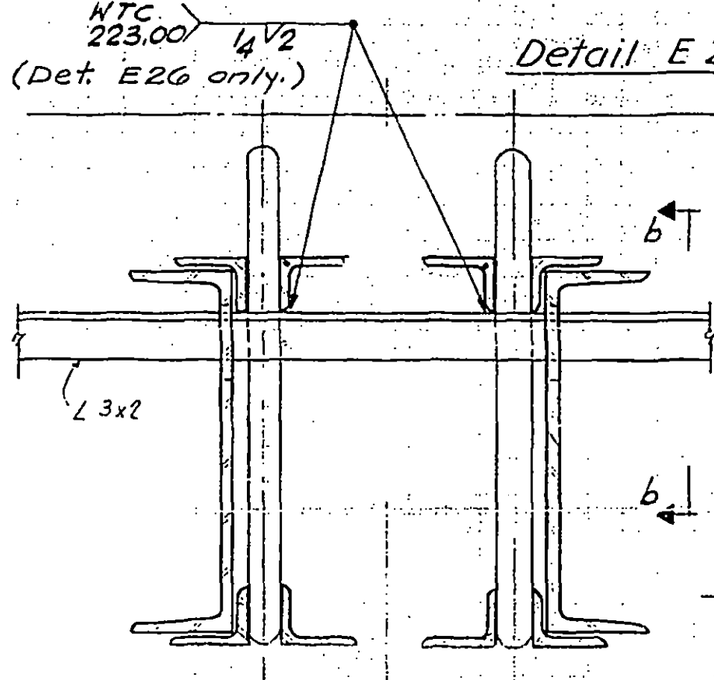

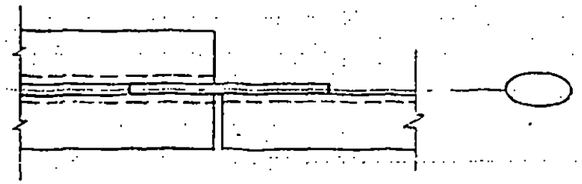

Section a-a

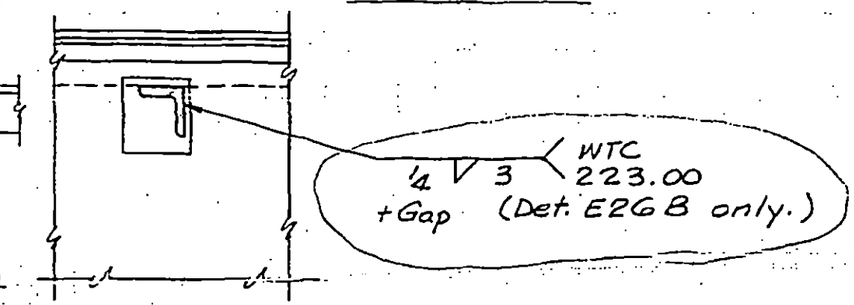

Section b-b

Detail E26 & E26B

LICENSED PROFESSIONAL ENGINEER
LESLIE E. ROBERTSON
No. 34360
UNIVERSITY OF THE STATE OF NEW YORK

72

7-AB4-15.1

SKILLING, HELLE, CHRISTIANSEN, ROBERTSON — Structural & Civil Engineers

PROJECT: THE WORLD TRADE CENTER | TITLE: FLOOR PANEL - DETAIL E26A & E26C | DATE: 8-1-68

REVISIONS

10-4-68

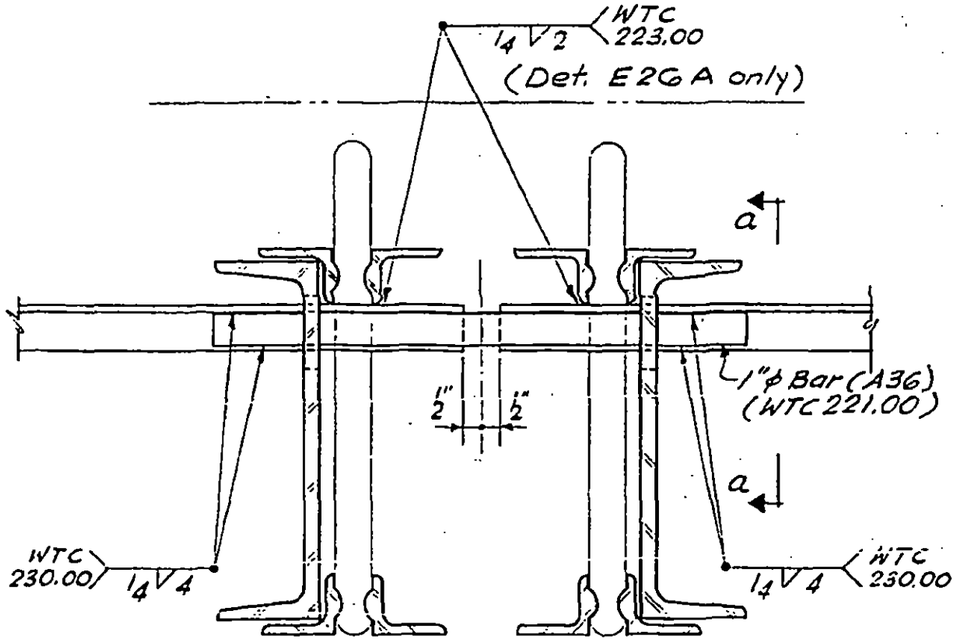

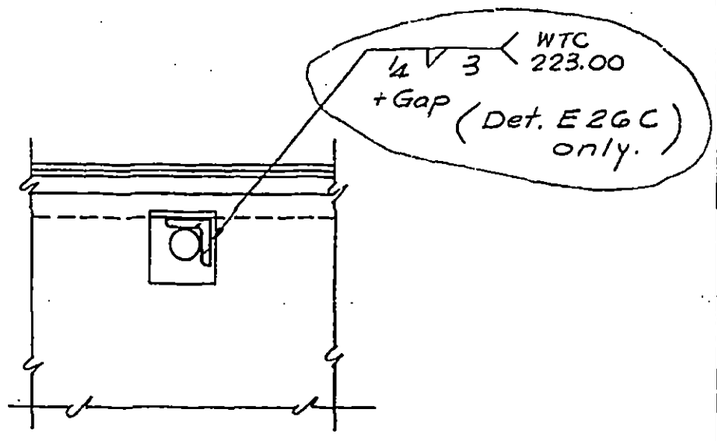

Section a-a

LICENSED PROFESSIONAL ENGINEER — LESLIE E. ROBERTSON — No. 34870 — NEW YORK

DESIGNED

DRAWN

REVIEWED

7-AB4-15.2

SKILLING - HELLE - CHRISTIANSEN - ROBERTSON Structural & Civil Engineers

PROJECT THE WORLD TRADE CENTER | TITLE FLOOR PANEL - DETAIL E27, E27A | DATE 10-20-67

REVISIONS

1-3-68
5-6-68
7-22-68

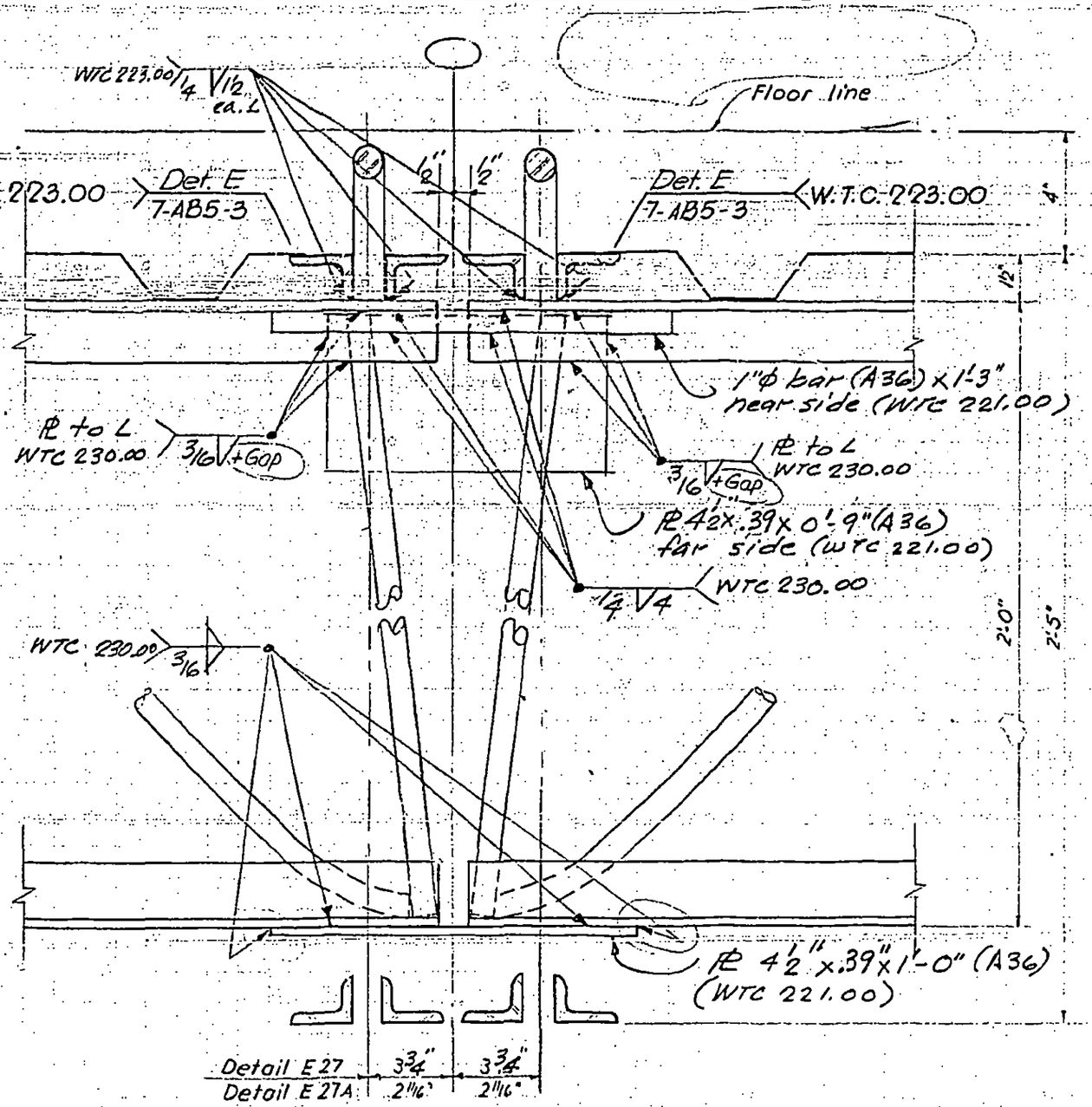

LICENSED PROFESSIONAL ENGINEER LESLIE E. ROBERTSON NO. 34[illegible] UNIVERSITY OF [illegible]

67

7-AB4-16

SKILLING - HELLE - CHRISTIANSEN - ROBERTSON Structural & Civil Engineers

PROJECT THE WORLD TRADE CENTER | TITLE FLOOR PANEL DETAIL E 28 | DATE 1-3-68

REVISIONS

6-1-68
8-15-68
10-4-68

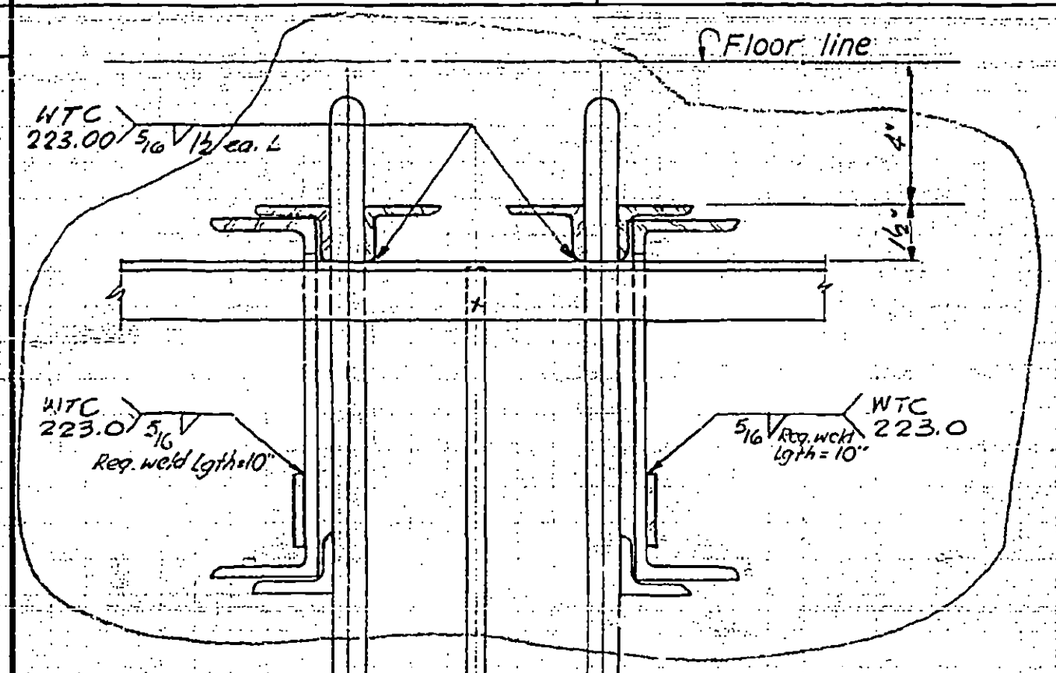

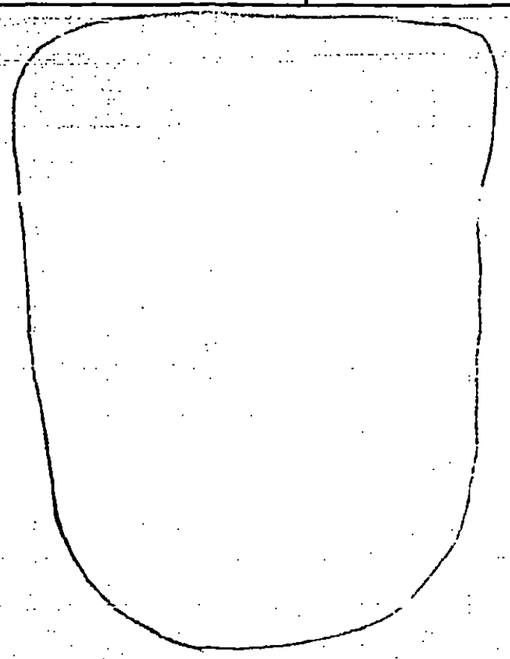

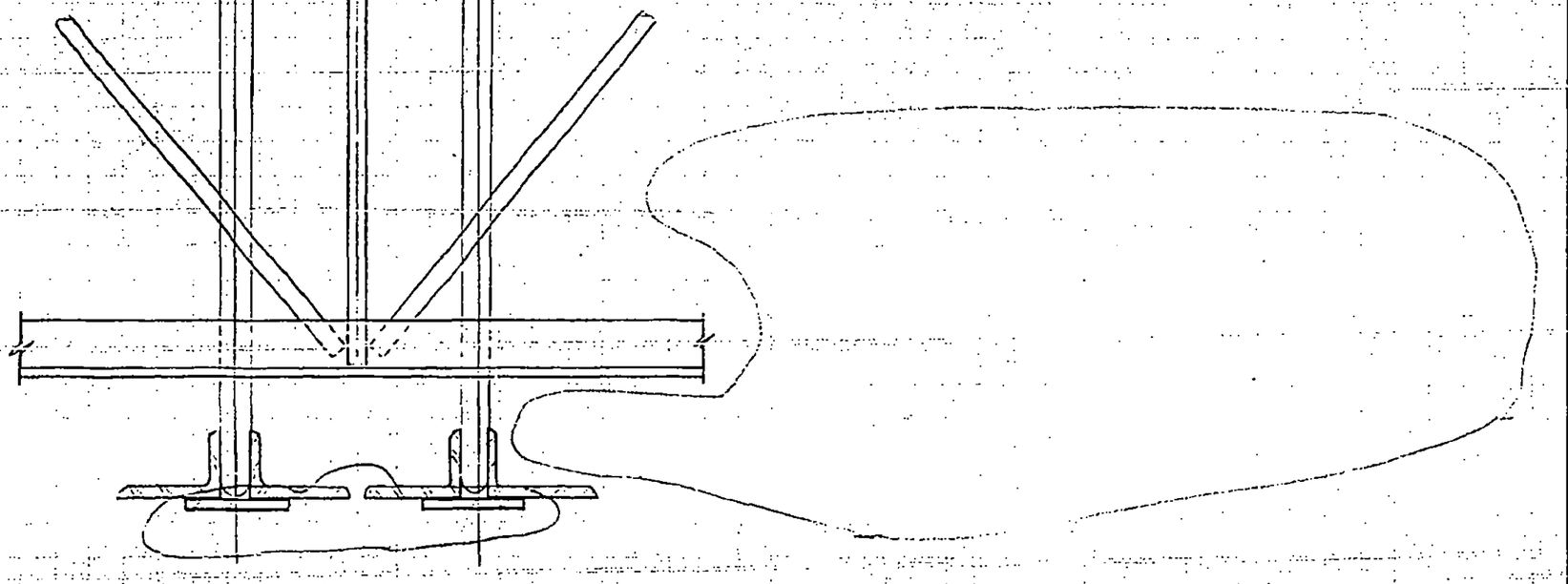

LICENSED PROFESSIONAL ENGINEER
LESLIE E. ROBERTSON
No. 34320
UNIVERSITY OF THE STATE OF NEW YORK

7-AB4-17

SKILLING, HELLE, CHRISTIANSEN, ROBERTSON — Structural & Civil Engineers

PROJECT: THE WORLD TRADE CENTER | TITLE: FLOOR PANEL - DETAIL E28A | DATE: 8-1-68

REVISIONS

8-15-68
10-4-68

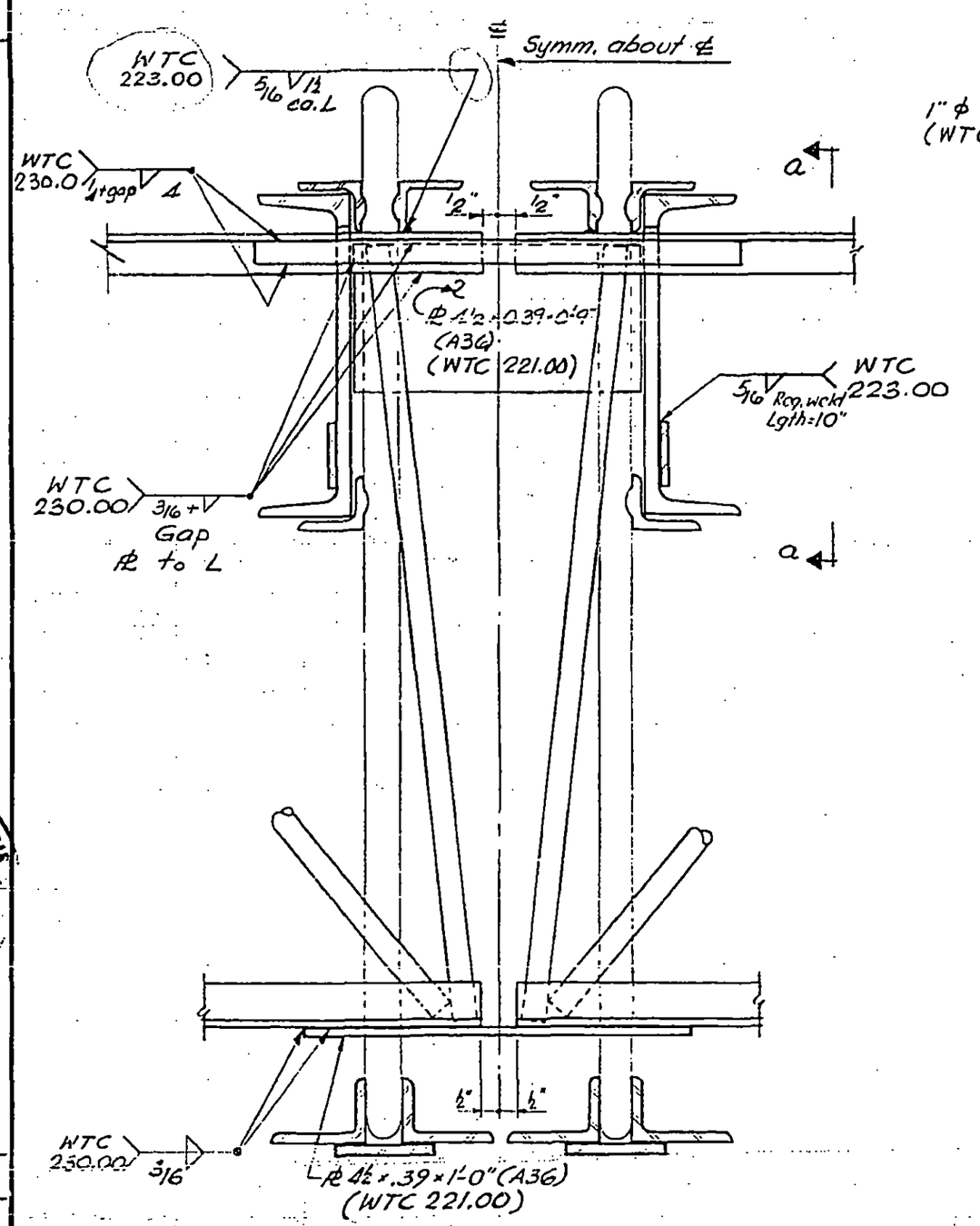

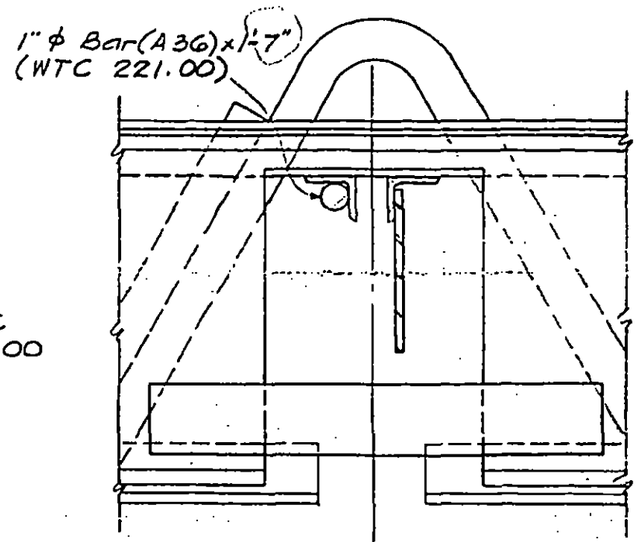

Section a-a

DESIGNED

DRAWN

REVIEWED

7-AB4-17.1

SKILLING, HELLE, CHRISTIANSEN, ROBERTSON — Structural & Civil Engineers

PROJECT THE WORLD TRADE CENTER | TITLE FLOOR PANEL - DETAIL E28, E28A, E28B, E28D | DATE 8-1-68

REVISIONS

8-15-68
10-4-68
12-20-68

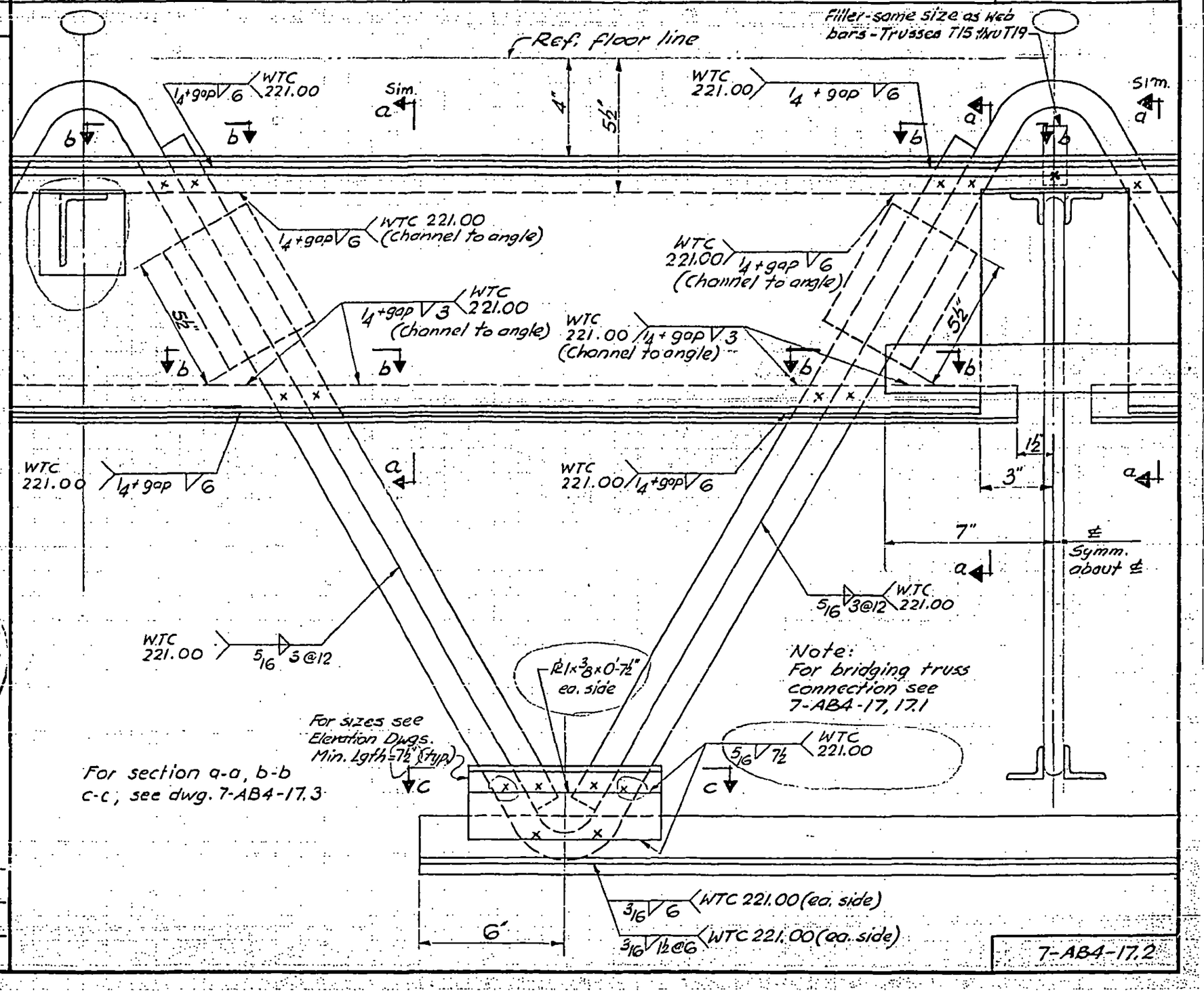

DESIGNED

DRAWN

REVIEWED

7-AB4-17.2

SKILLING, HELLE, CHRISTIANSEN, ROBERTSON — Structural & Civil Engineers

PROJECT: THE WORLD TRADE CENTER | TITLE: FLOOR PANEL - DETAIL E28, E28A, E28B, E28C, E28D | DATE: 8-1-68

REVISIONS

8-15-68
10-4-68
7-28-70

Note A: Add arc welding as reqd. to develop full strength of web bars.

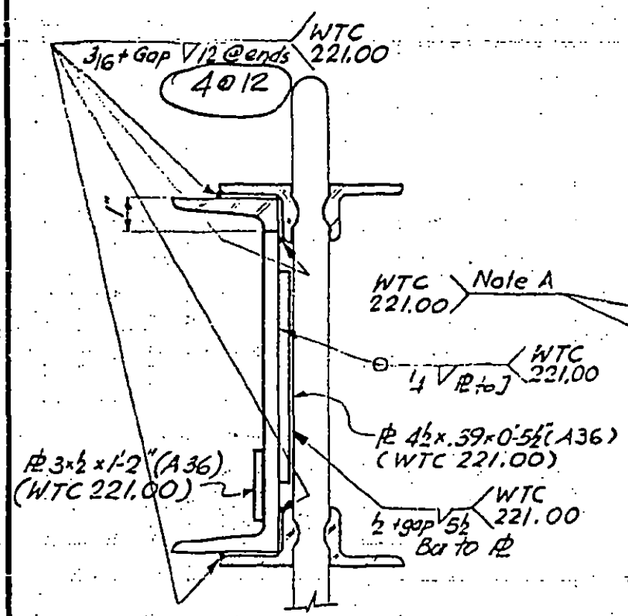

Section a-a

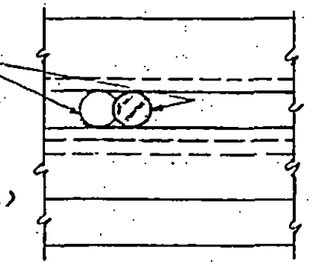

Section b-b

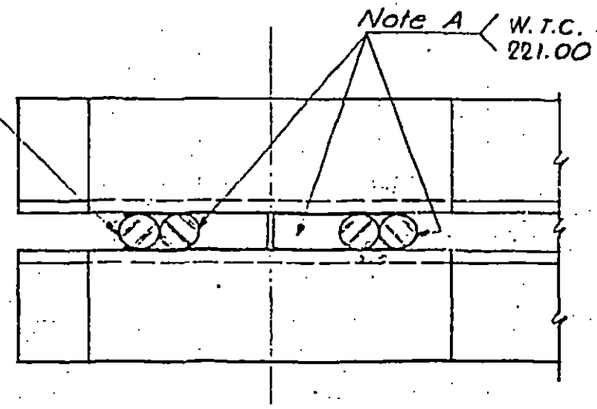

Section c-c

Note: For additional J to 7 welding see detail E28, E28A, E28B, E28D, 7-AB4-17

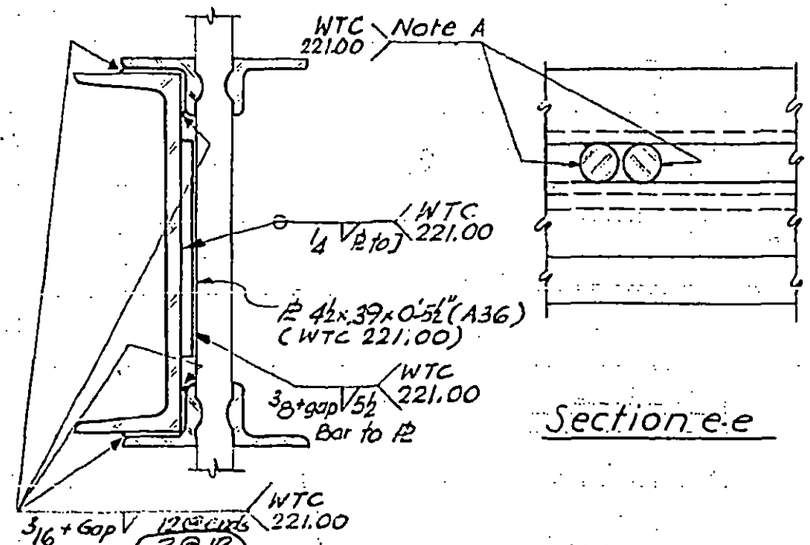

Section d-d

Section e-e

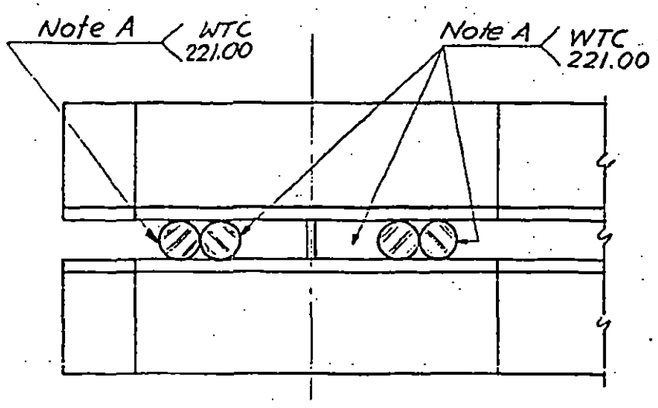

Section f-f

Note: For additional J to 7 welding see detail E28C 7-AB4-17.5

DESIGNED

DRAWN

REVIEWED

7-AB4-17.3

SKILLING, HELLE, CHRISTIANSEN, ROBERTSON — Structural & Civil Engineers

PROJECT: THE WORLD TRADE CENTER | TITLE: FLOOR PANEL DETAIL E 28 B | DATE: 8-1-68

REVISIONS

8-15-68
10-4-68

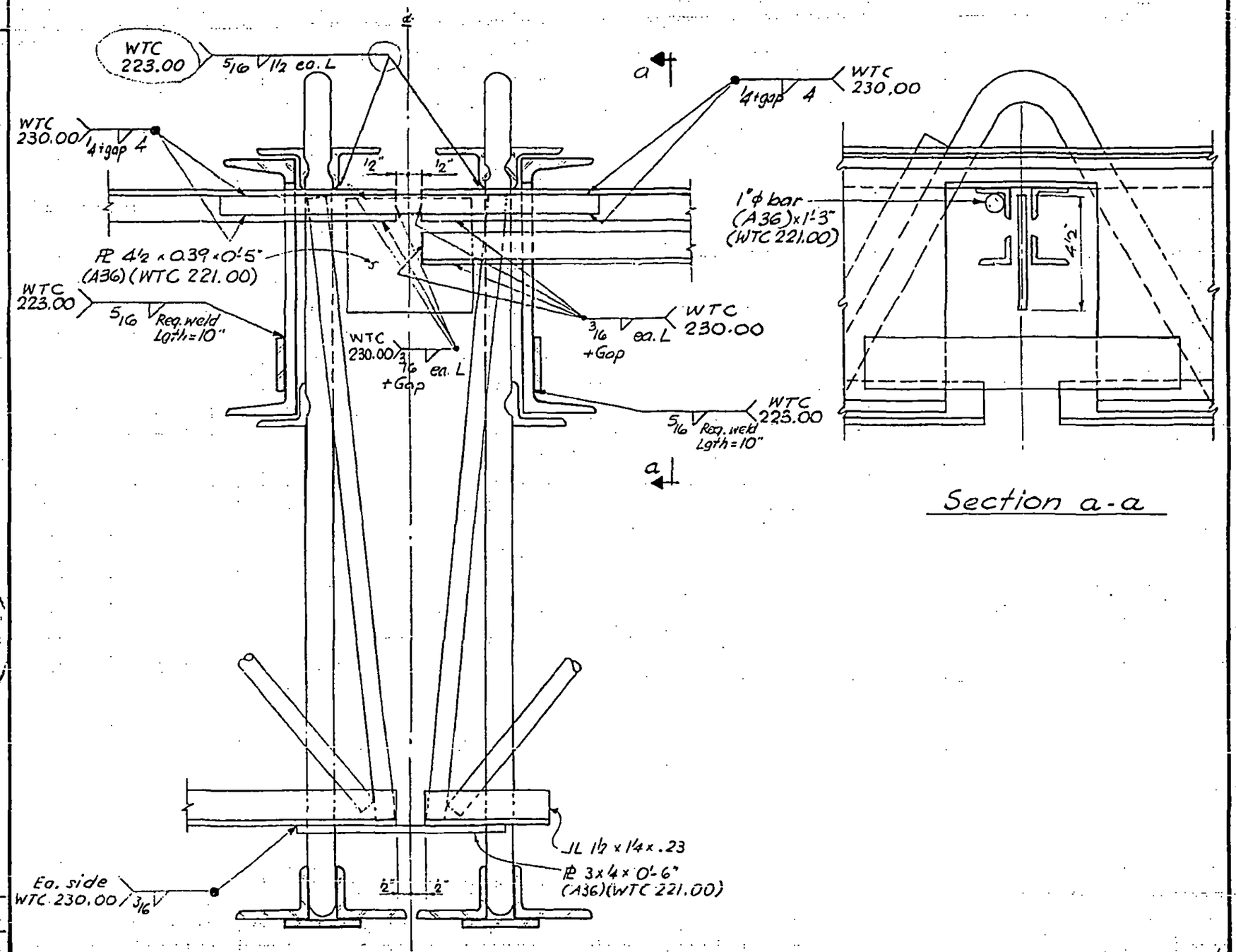

Section a-a

DESIGNED

DRAWN

REVIEWED

7-AB4-17.4

SKILLING, HELLE, CHRISTIANSEN, ROBERTSON — Structural & Civil Engineers

PROJECT: THE WORLD TRADE CENTER | TITLE: FLOOR PANEL - DETAIL E28C | DATE: 8-1-68

REVISIONS

8-15-68
10-4-68

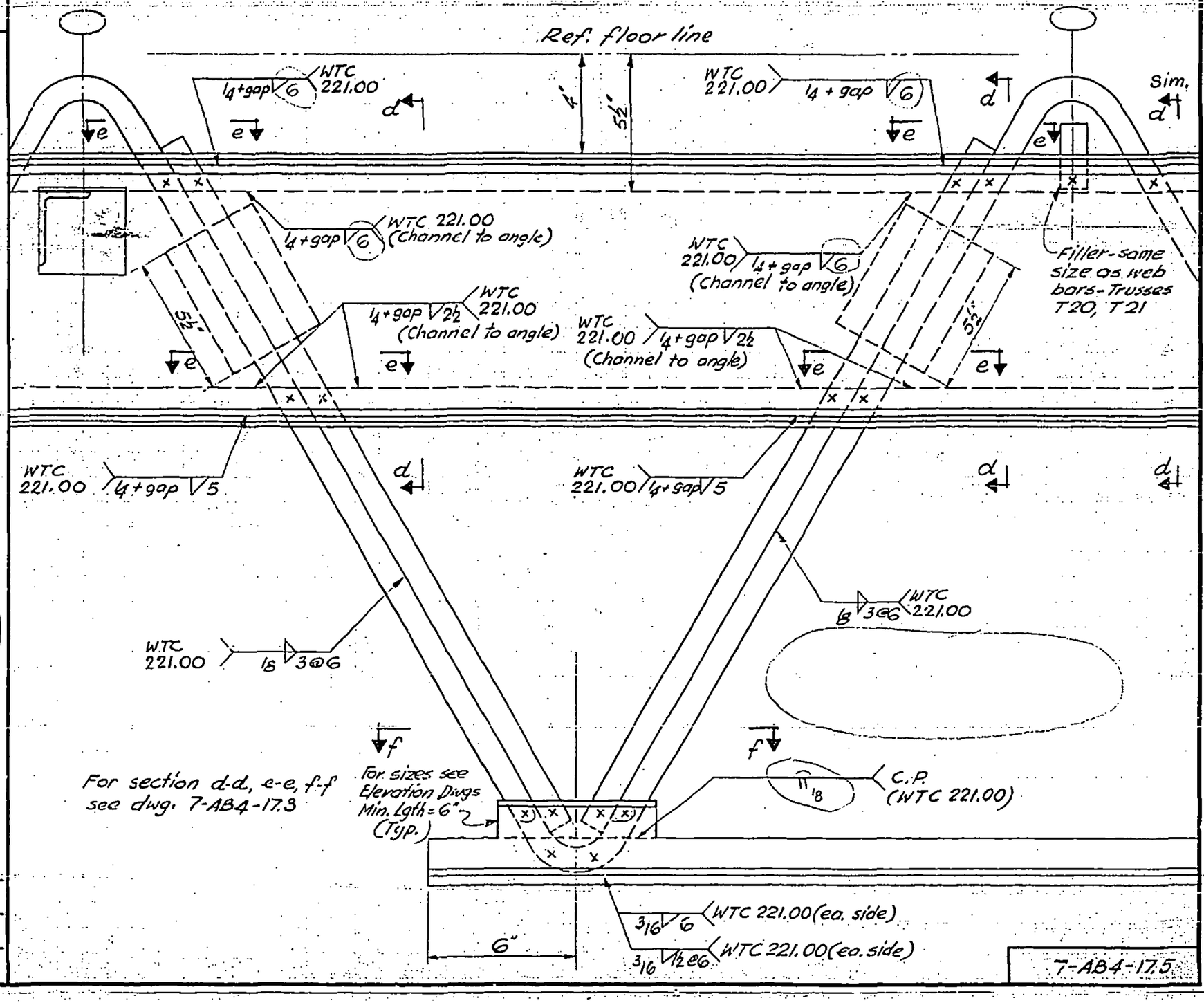

LICENSED PROFESSIONAL ENGINEER — LESLIE E. ROBERTSON — No. 34360 — N.Y.

DESIGNED

DRAWN

REVIEWED

7-AB4-17.5

SKILLING, HELLE, CHRISTIANSEN, ROBERTSON — Structural & Civil Engineers

PROJECT THE WORLD TRADE CENTER | TITLE FLOOR PANEL DETAIL E28 D | DATE 8-1-68

REVISIONS

10-4-68

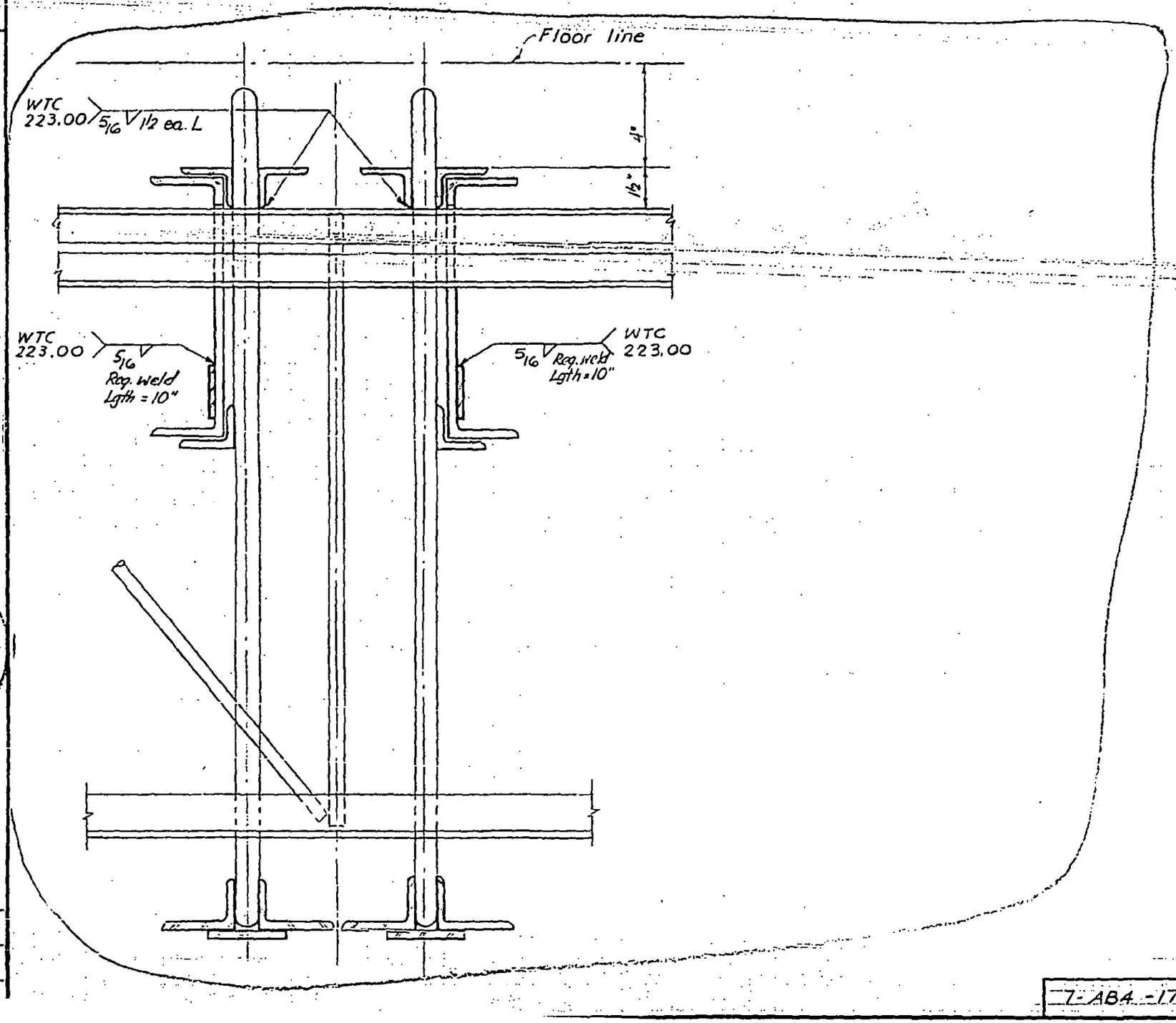

LICENSED PROFESSIONAL ENGINEER
LESLIE E. ROBERTSON
No. 34360
UNIVERSITY OF THE STATE OF NEW YORK

DESIGNED

DRAWN

REVIEWED

7-AB4-17.6

SKILLING, HELLE, CHRISTIANSEN, ROBERTSON — Structural & Civil Engineers

PROJECT: THE WORLD TRADE CENTER | TITLE: FLOOR PANEL DETAIL E 28 E | DATE: 8-15-68

REVISIONS

10-4-68

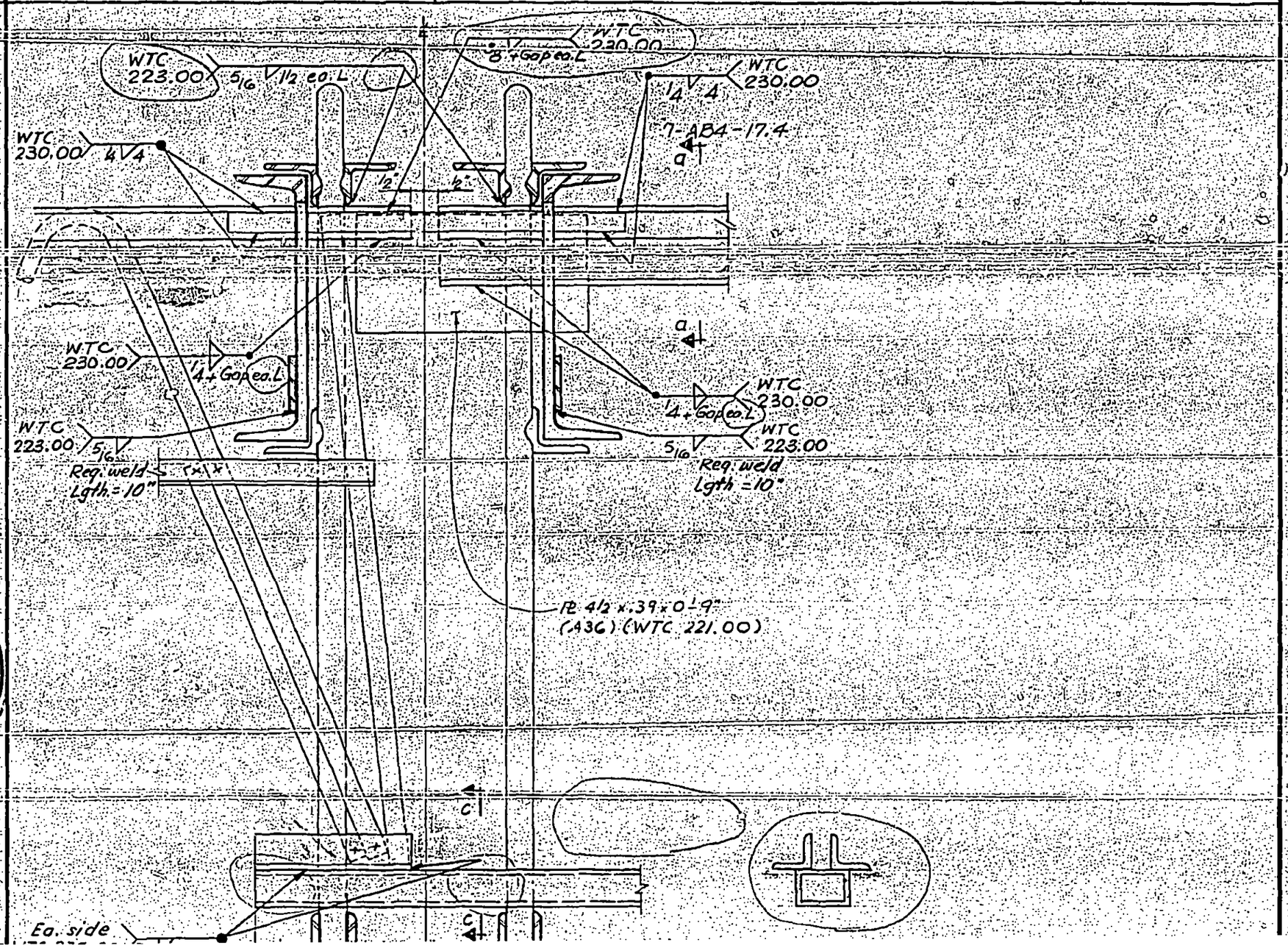

LICENSED PROFESSIONAL ENGINEER
LESLIE E. ROBERTSON
No. 34360
THE STATE OF NEW YORK

SKILLING - HELLE - CHRISTIANSEN - ROBERTSON Structural & Civil Engineers

PROJECT THE WORLD TRADE CENTER | TITLE FLOOR PANEL DETAIL E28F | DATE 8-15-68

REVISIONS

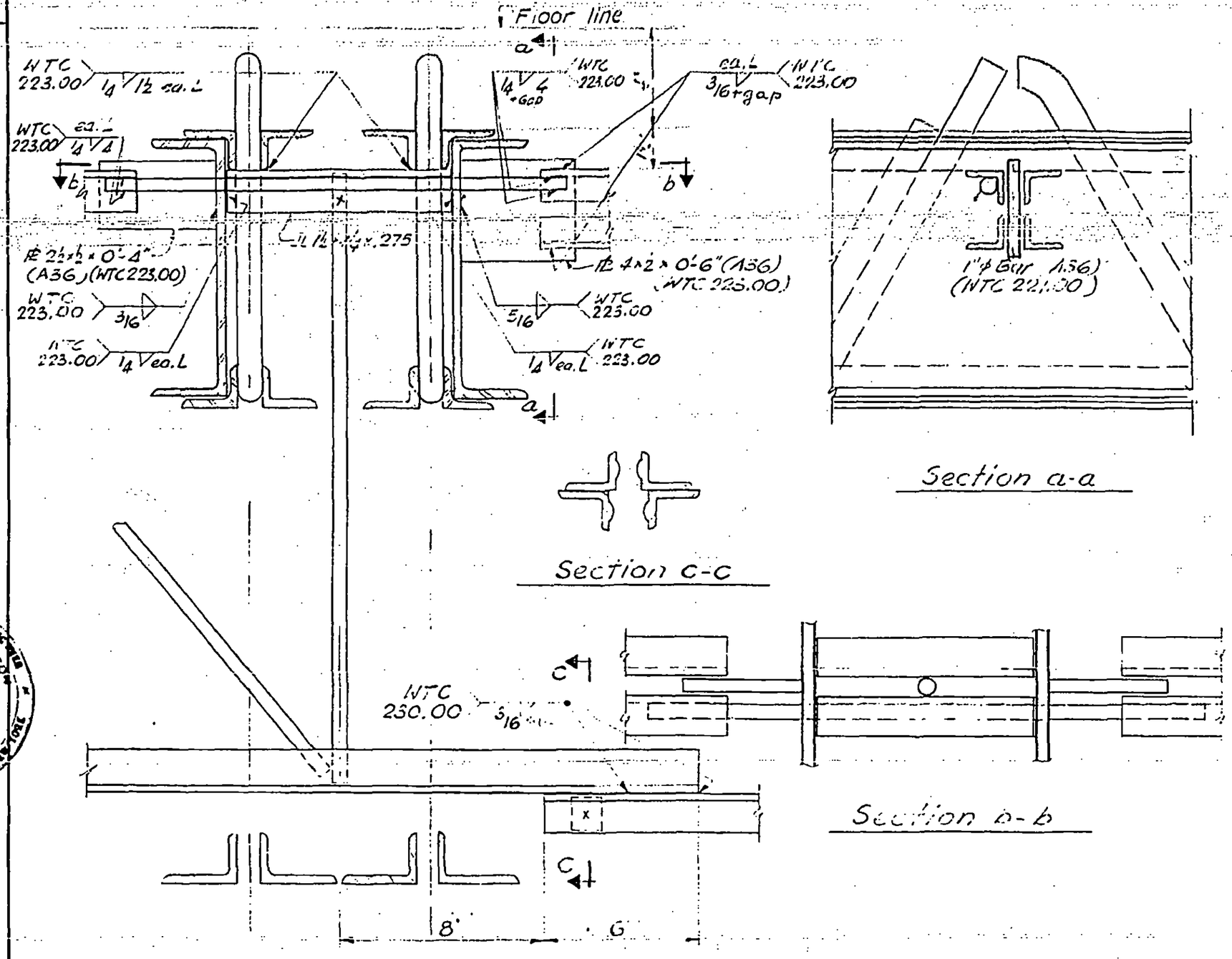

LICENSED PROFESSIONAL ENGINEER LESLIE E. ROBERTSON No. 24360 UNIVERSITY OF THE STATE OF NEW YORK

7-AB4-17.6

SKILLING - HELLE - CHRISTIANSEN - ROBERTSON Structural & Civil Engineers

PROJECT THE WORLD TRADE CENTER | TITLE FLOOR PANEL - DETAILS E34, E35, E35A | DATE 1-3-68

REVISIONS

4-1-68
5-6-68
7-22-68
1-6-69

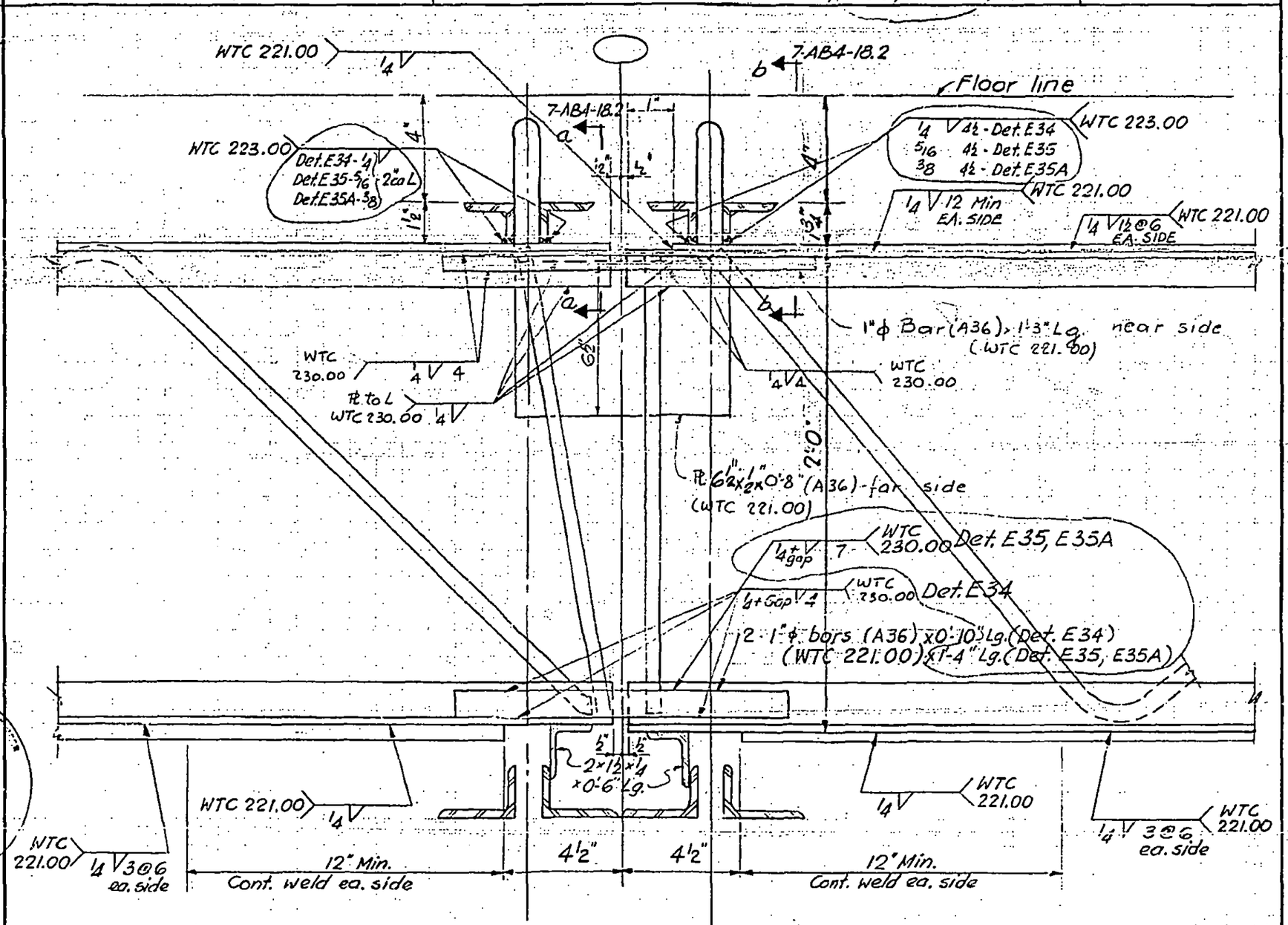

LICENSED PROFESSIONAL ENGINEER
LESLIE E. ROBERTSON
No. [illegible]
UNIVERSITY OF THE STATE

54

7-AB4-18

SKILLING - HELLE - CHRISTIANSEN - ROBERTSON Structural & Civil Engineers

PROJECT THE WORLD TRADE CENTER | TITLE FLOOR PANEL - DETAIL E30 | DATE 5-6-68

REVISIONS

7-22-68

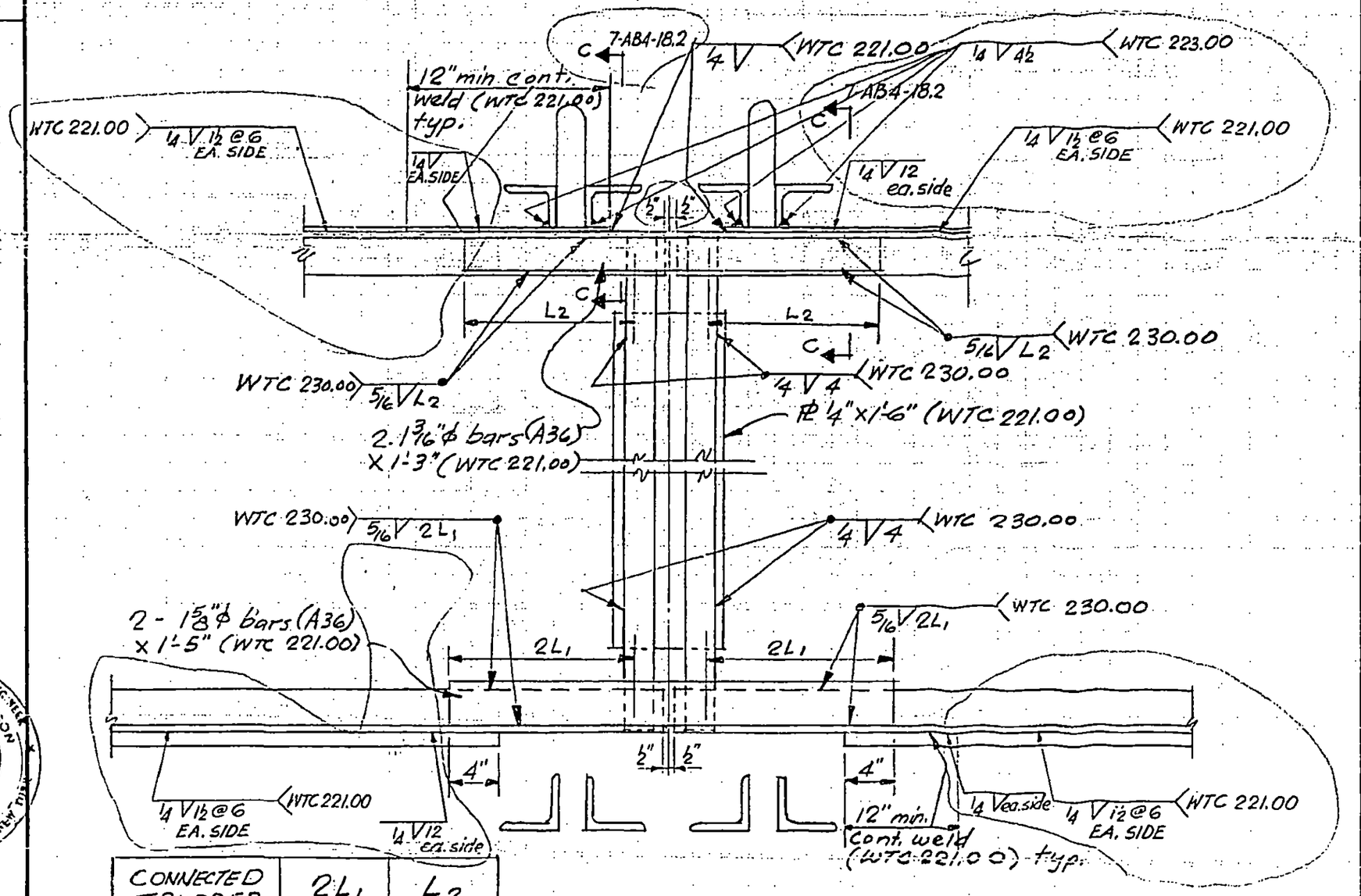

CONNECTED TRUSSES	2L1	L2
24T7A - T8A	7½"	4"
24T7 - T8	7"	3¾"
24T8-8B	6½"	3½"

LICENSED PROFESSIONAL ENGINEER LESLIE E. ROBERTSON No. 34360 UNIVERSITY OF THE STATE OF NEW YORK

7-AB4-18.1

SKILLING, HELLE, CHRISTIANSEN, ROBERTSON — Structural & Civil Engineers

PROJECT THE WORLD TRADE CENTER | TITLE FLOOR PANEL - DETAIL E30, E34 & E34A | DATE 7-22-68

REVISIONS

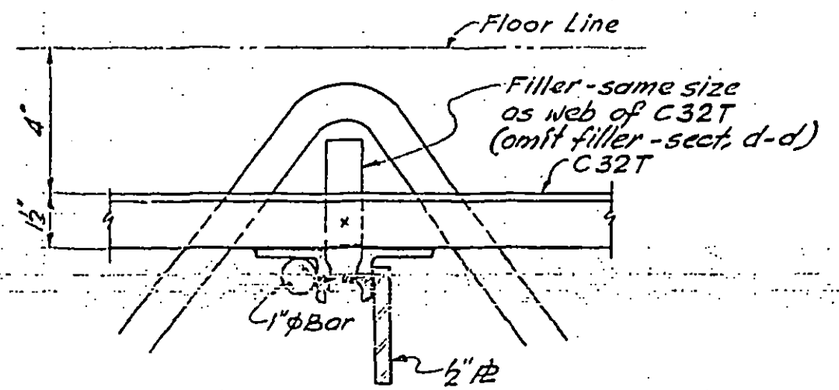

Section a-a

Section d-d - similar except as noted

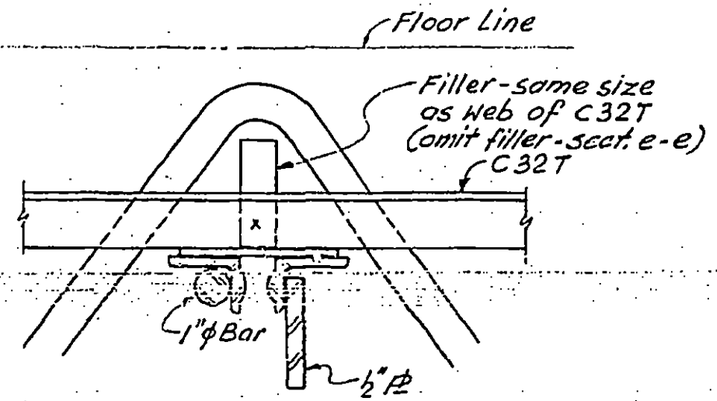

Section b-b

Section e-e - similar except as noted

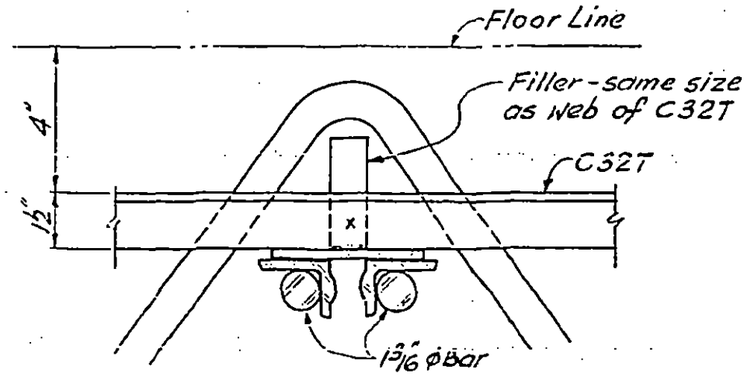

Section c-c

LICENSED PROFESSIONAL ENGINEER
LESLIE E. ROBERTSON
No. 34360
UNIVERSITY OF THE STATE OF NEW YORK

DESIGNED

DRAWN

REVIEWED

70

7-AB4-18.2

SKILLING, HELLE, CHRISTIANSEN, ROBERTSON — Structural & Civil Engineers

PROJECT: THE WORLD TRADE CENTER | TITLE: FLOOR PANEL - DETAIL E 34A | DATE: 7-22-68

REVISIONS

10-15-68
12-20-68

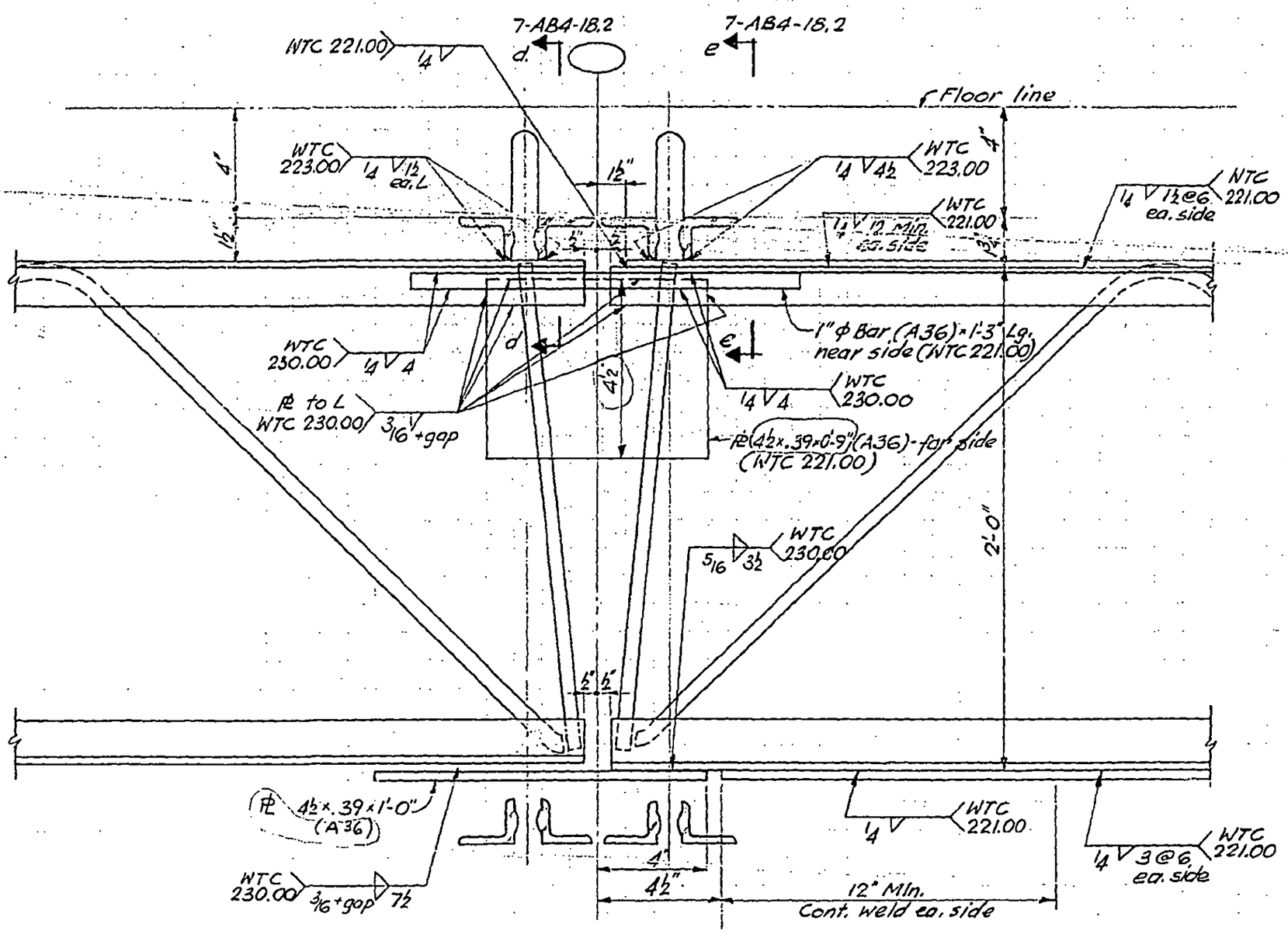

LICENSED PROFESSIONAL ENGINEER — LESLIE E. ROBERTSON — No. 34350 — UNIVERSITY OF THE STATE OF NEW YORK

DESIGNED

DRAWN

REVIEWED

71

7-AB4-18.3

SKILLING, HELLE, CHRISTIANSEN, ROBERTSON — Structural & Civil Engineers

PROJECT THE WORLD TRADE CENTER | TITLE FLOOR PANEL - DETAIL E 34 B | DATE 8-15-68

REVISIONS

10-4-68

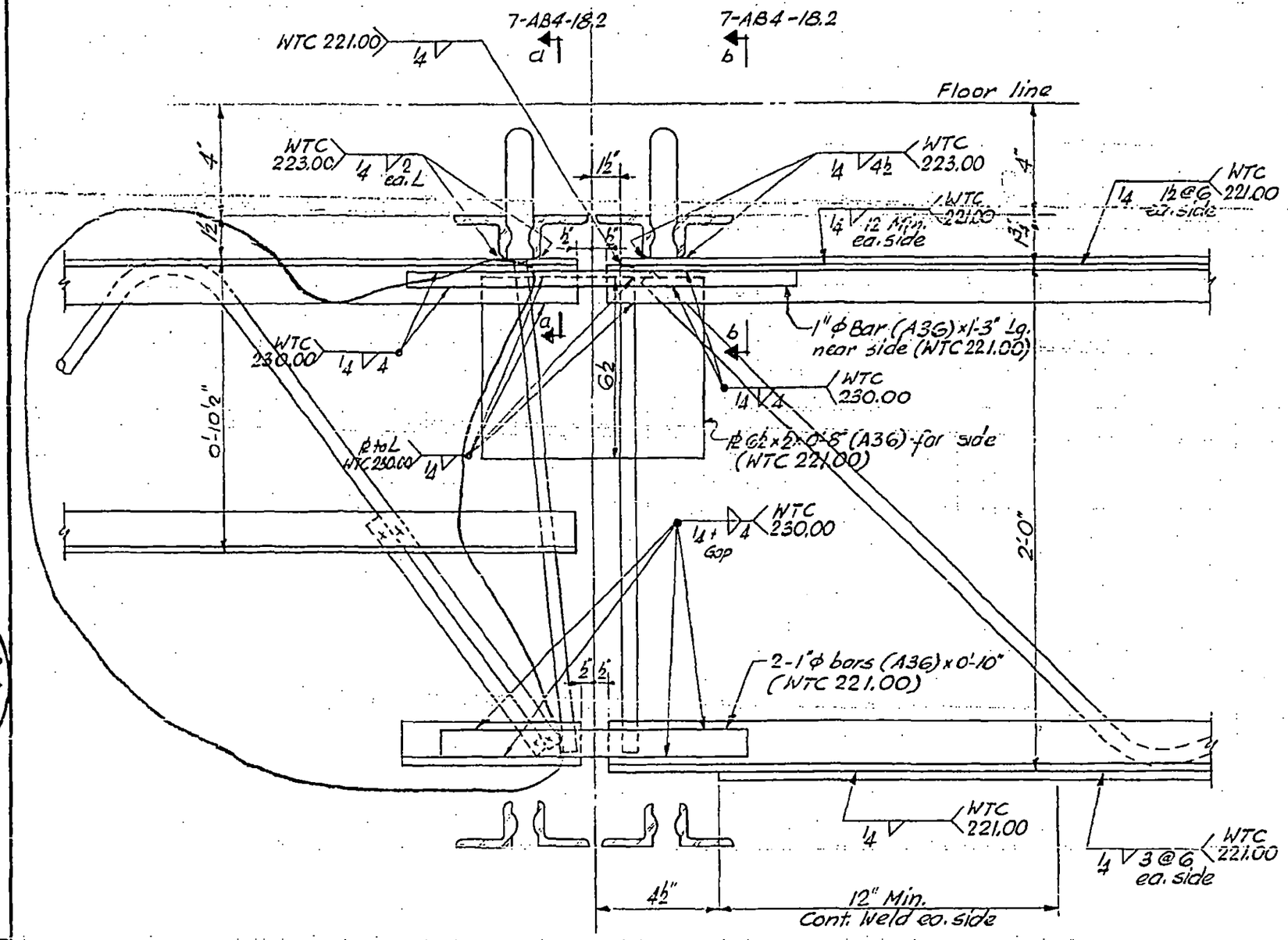

LICENSED PROFESSIONAL ENGINEER
LESLIE E. ROBERTSON
No. 34360
UNIVERSITY OF THE STATE OF NEW YORK

DESIGNED

DRAWN

REVIEWED

7-AB4-18.4

SKILLING, HELLE, CHRISTIANSEN, ROBERTSON Structural & Civil Engineers

PROJECT THE WORLD TRADE CENTER | TITLE FLOOR PANEL - DETAIL E 31 | DATE 1-6-69

REVISIONS

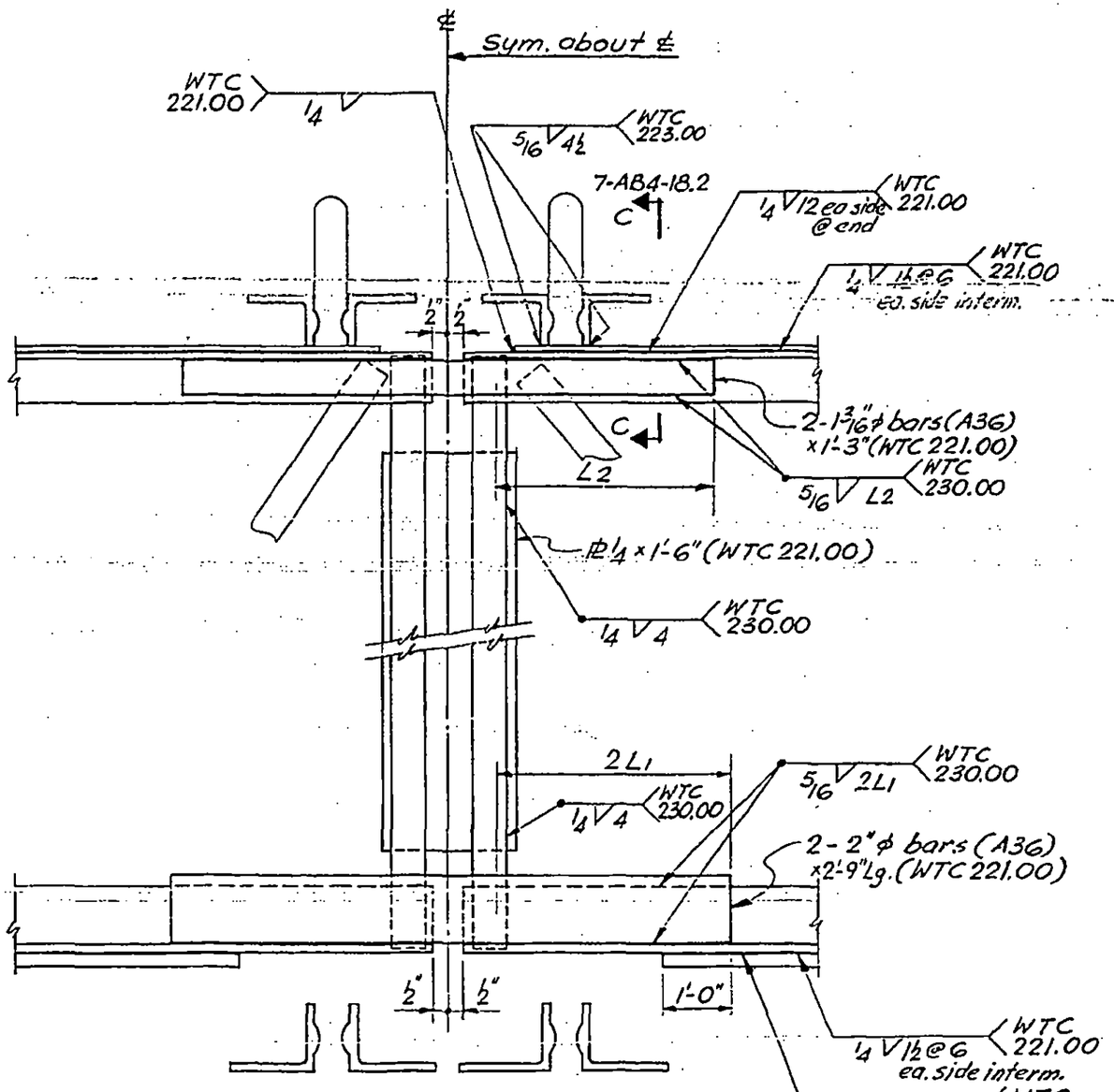

Connected Trusses	2L1	L2
24T7F-T8C	8"	4"
24T7G-T8D	10"	4"
24T7H-T8E	9"	4"

LICENSED PROFESSIONAL ENGINEER LESLIE E. ROBERTSON No. 34360 UNIVERSITY OF THE STATE OF NEW YORK

DESIGNED

DRAWN

REVIEWED

7-AB4-18.5

SKILLING - HELLE - CHRISTIANSEN - ROBERTSON Structural & Civil Engineers

PROJECT THE WORLD TRADE CENTER | TITLE FLOOR PANEL DETAIL E38 & E39 | DATE 1-3-68

REVISIONS

7-22-68
10-15-68
12-20-68

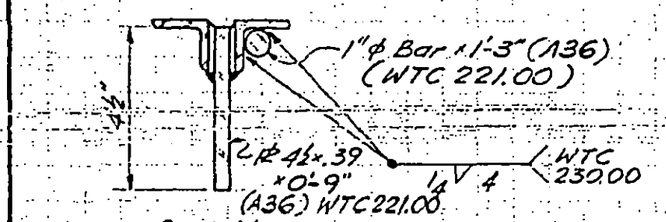

Section a-a

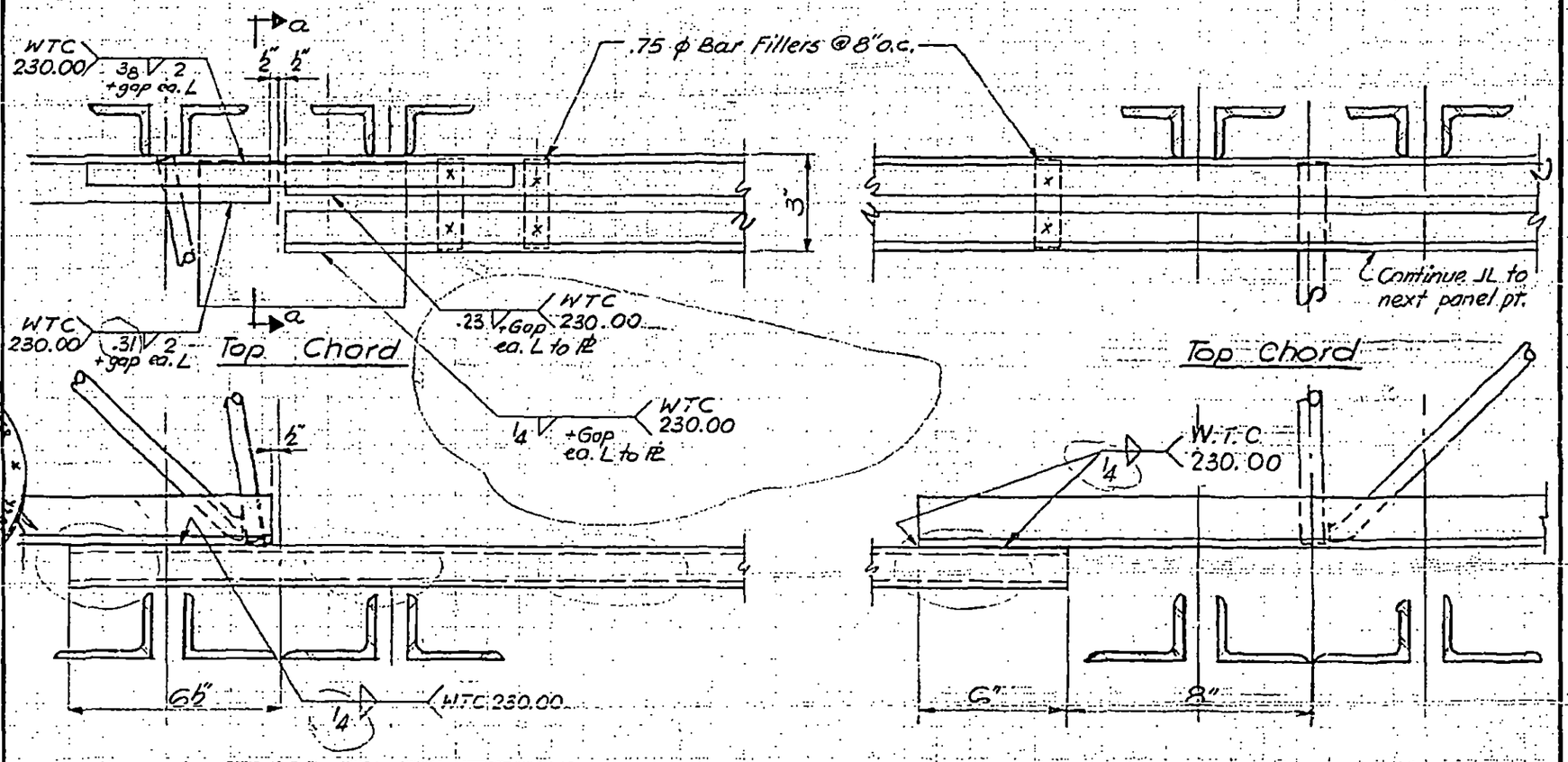

Bottom Chord

E39

Bottom Chord

E38

7-AB4-19

LICENSED PROFESSIONAL ENGINEER
LESLIE E. ROBERTSON
No. 34360
UNIVERSITY OF THE STATE OF NEW YORK

SKILLING - HELLE - CHRISTIANSEN - ROBERTSON Structural & Civil Engineers

PROJECT THE WORLD TRADE CENTER | TITLE FLOOR PANEL DETAIL E40, E40A, E45, E45A | DATE 1-3-68

REVISIONS

7-22-68
1-6-69

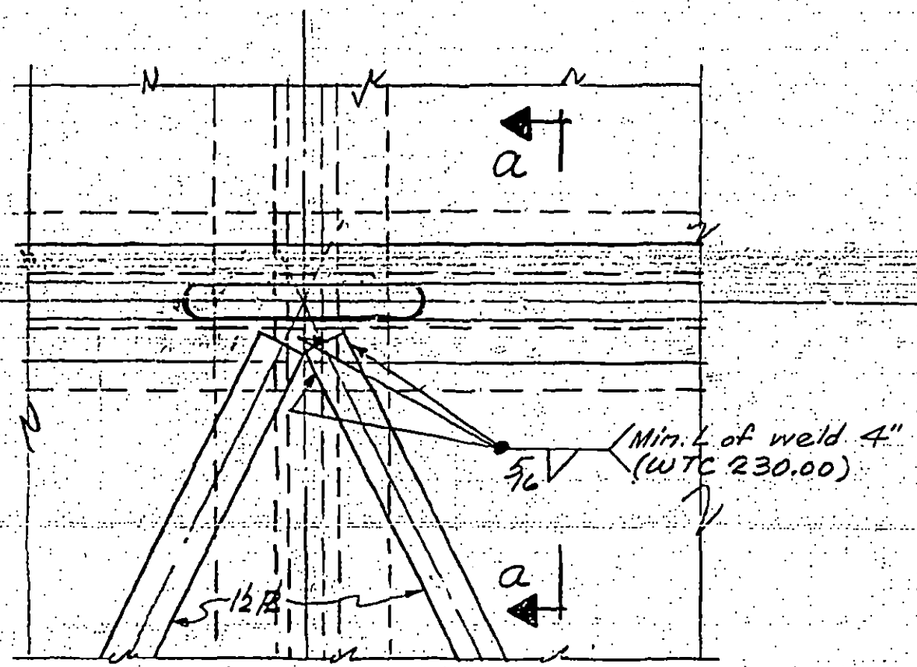

PLAN - DET. E40

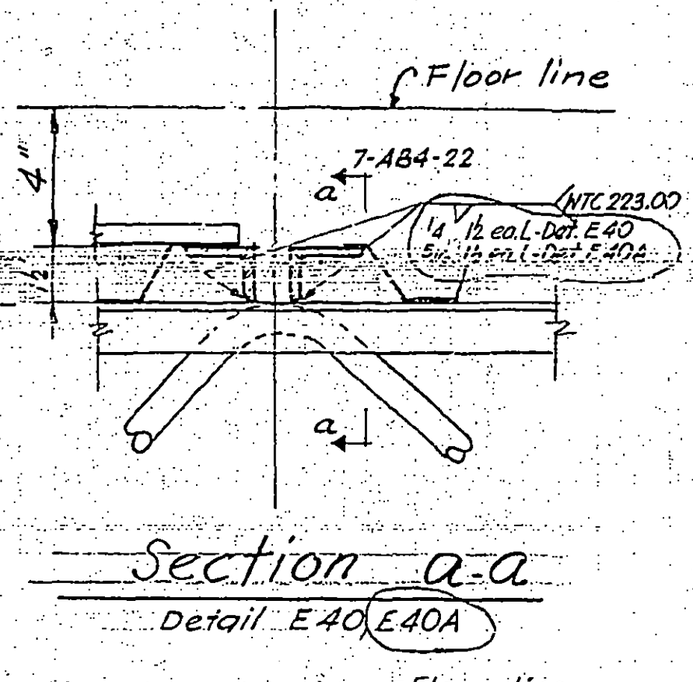

Section a-a

Detail E40, E40A

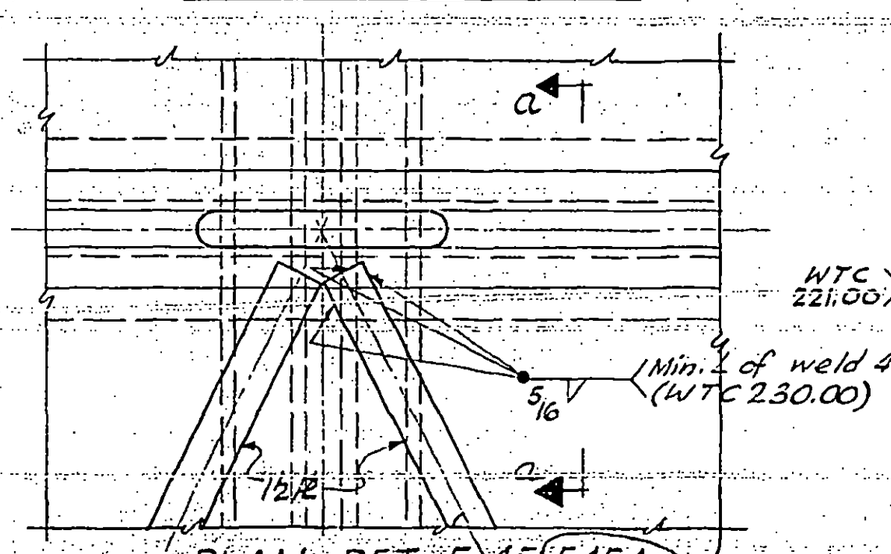

PLAN - DET. E45, E45A

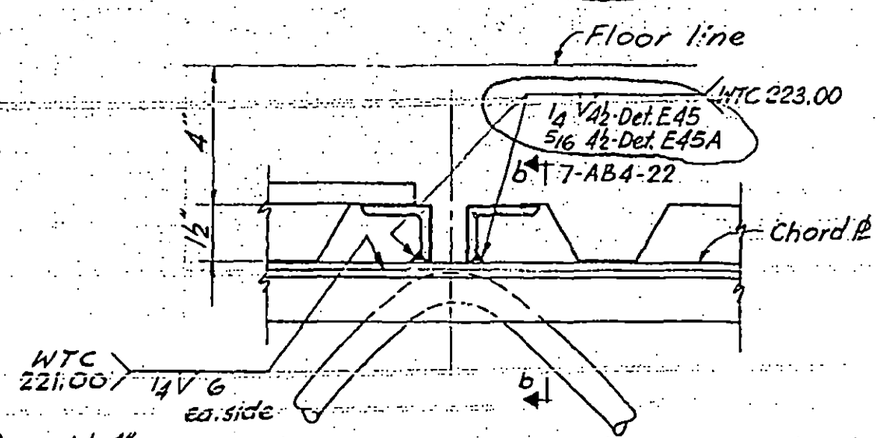

Section a-a

Detail E45, E45A

7-AB4-21

LICENSED PROFESSIONAL ENGINEER
LESLIE E. ROBERTSON
No. 34360
STATE OF NEW YORK

SKILLING, HELLE, CHRISTIANSEN, ROBERTSON — Structural & Civil Engineers

PROJECT: THE WORLD TRADE CENTER | TITLE: FLOOR PANEL - DETAIL E41, (E41A, E41C, E41E & E41D) | DATE: 1-3-68

REVISIONS

7-22-68
1-6-69

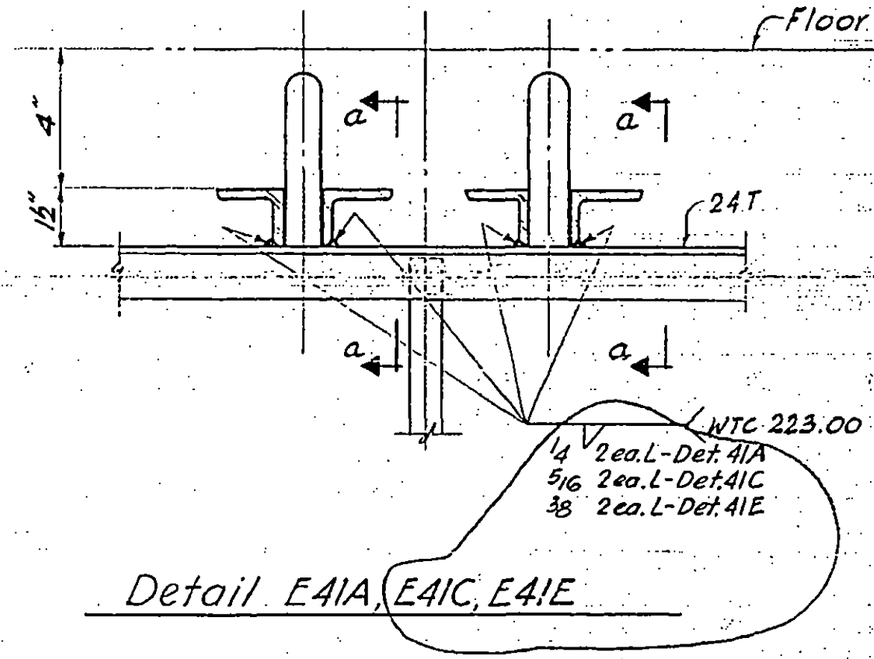

Detail E41A, E41C, E41E

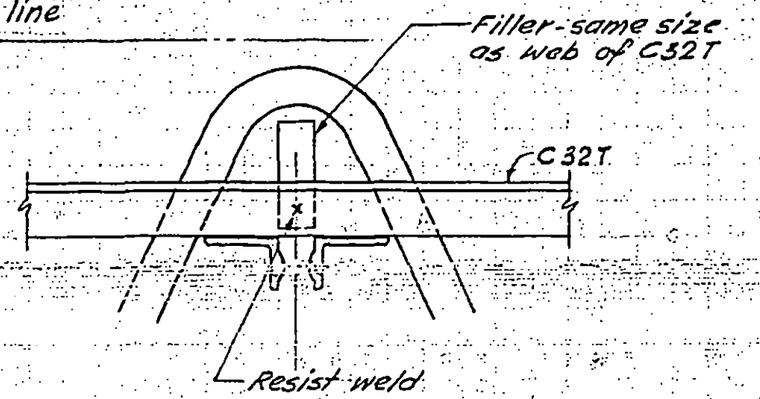

Section a-a

Section c-c similar except as noted.

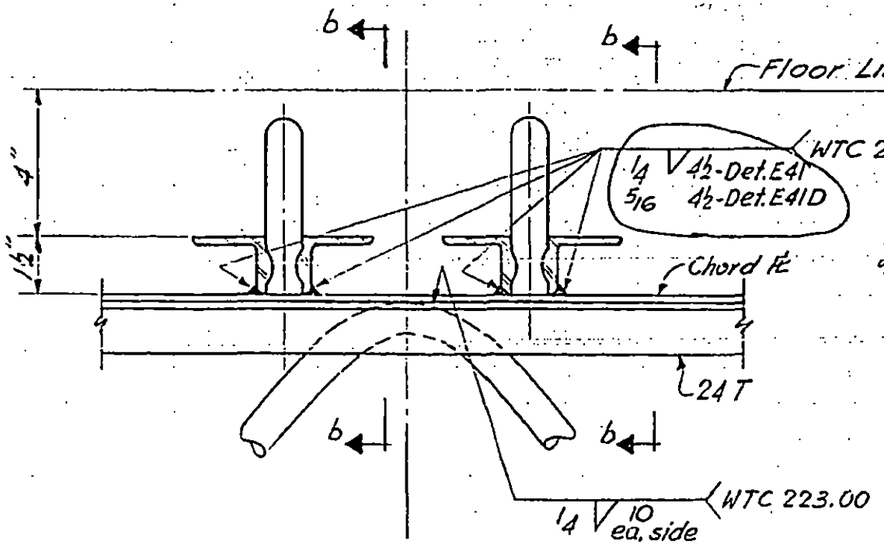

Detail E41, E41D

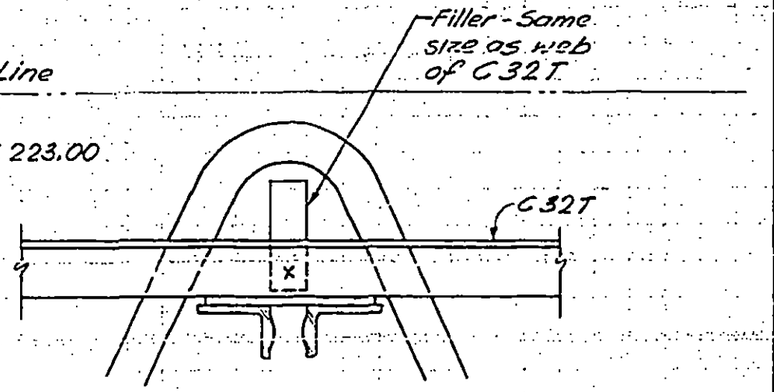

Section b-b

LICENSED PROFESSIONAL ENGINEER
LESLIE E. ROBERTSON
No. 34360
UNIVERSITY OF THE STATE OF NEW YORK

DESIGNED

DRAWN

REVIEWED

57

7-AB4-22

SKILLING, HELLE, CHRISTIANSEN, ROBERTSON — Structural & Civil Engineers

PROJECT THE WORLD TRADE CENTER | TITLE FLOOR PANEL - DETAIL E 41B & E 46 | DATE 7-22-68

REVISIONS

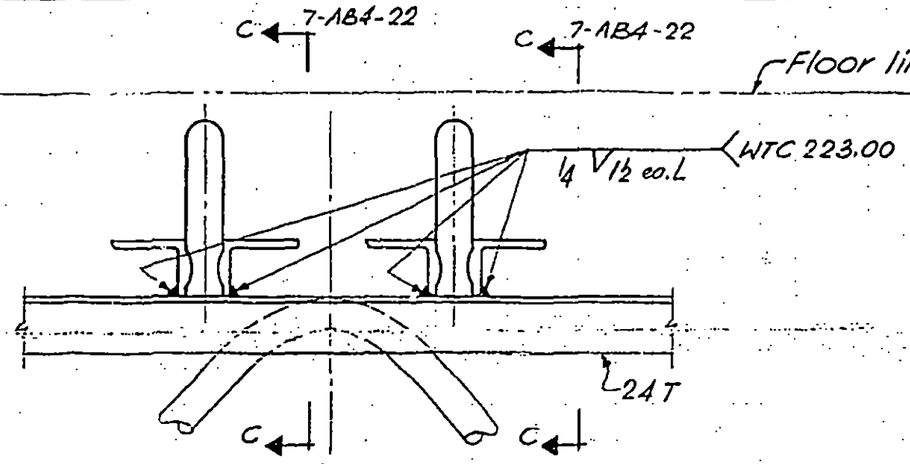

Detail E 46

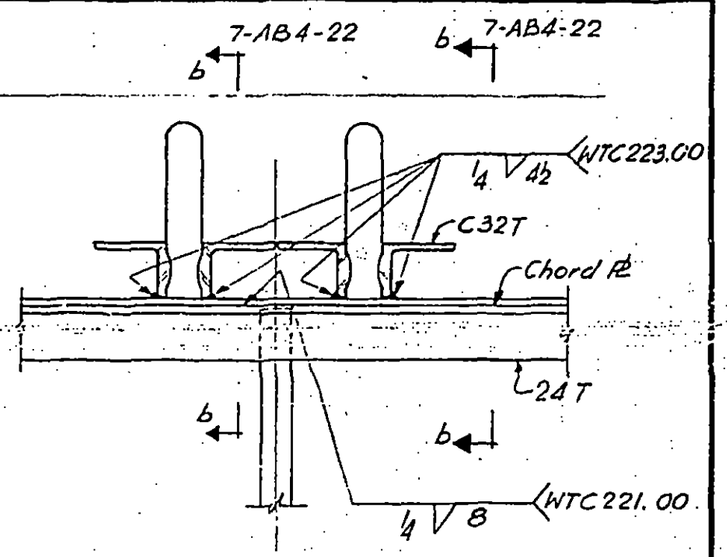

Detail E 41B

LICENSED PROFESSIONAL ENGINEER
LESLIE E. ROBERTSON
No. 34360
UNIVERSITY OF THE STATE OF NEW YORK

DESIGNED

DRAWN

REVIEWED

75

7-AB4-22.1

SKILLING - HELLE - CHRISTIANSEN - ROBERTSON Structural & Civil Engineers

PROJECT THE WORLD TRADE CENTER | TITLE FLOOR PANEL - DETAIL E 42 | DATE 1-3-68

REVISIONS

4-1-68

7-22-68

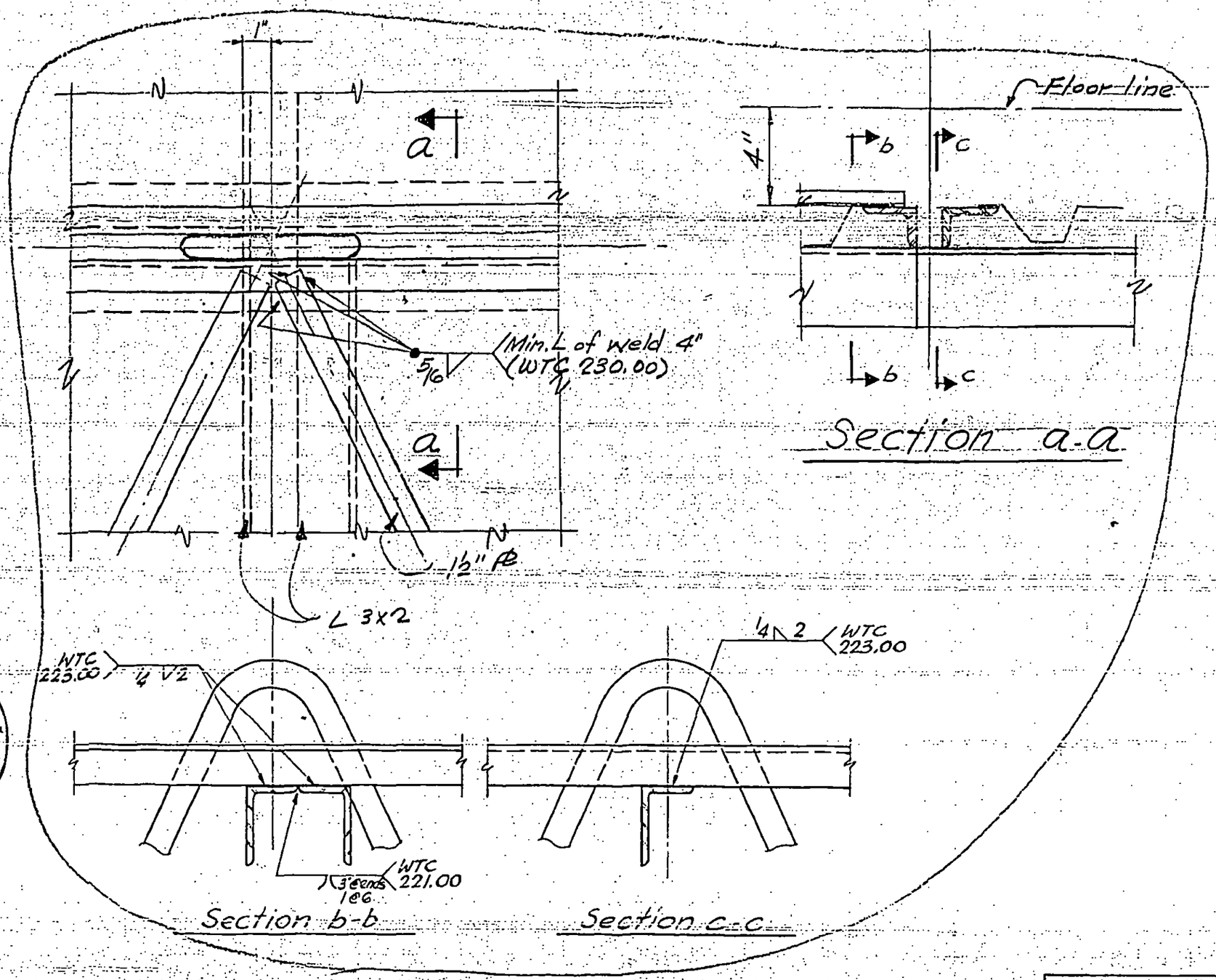

Section a-a

Section b-b

Section c-c

LICENSED PROFESSIONAL ENGINEER
LESLIE E. ROBERTSON
No. 34960
STATE OF NEW YORK

7-AB4-23

SKILLING - HELLE - CHRISTIANSEN - ROBERTSON Structural & Civil Engineers

PROJECT THE WORLD TRADE CENTER | TITLE FLOOR PANEL - DETAIL E43 | DATE 1-3-68

REVISIONS

4-1-68
7-22-68
10-15-68

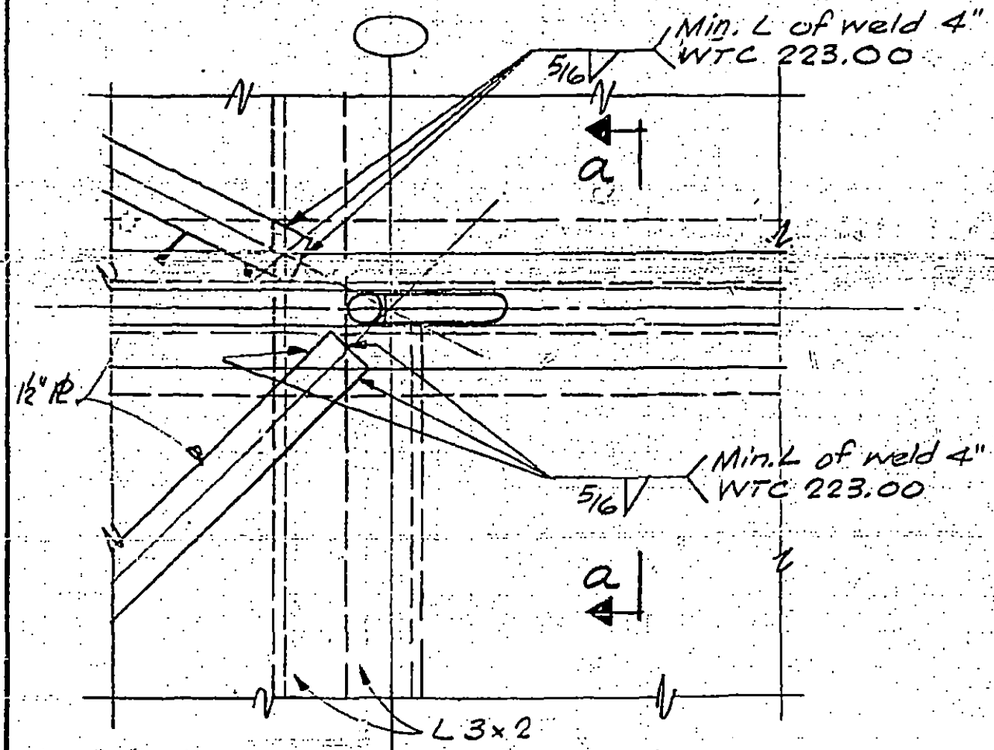

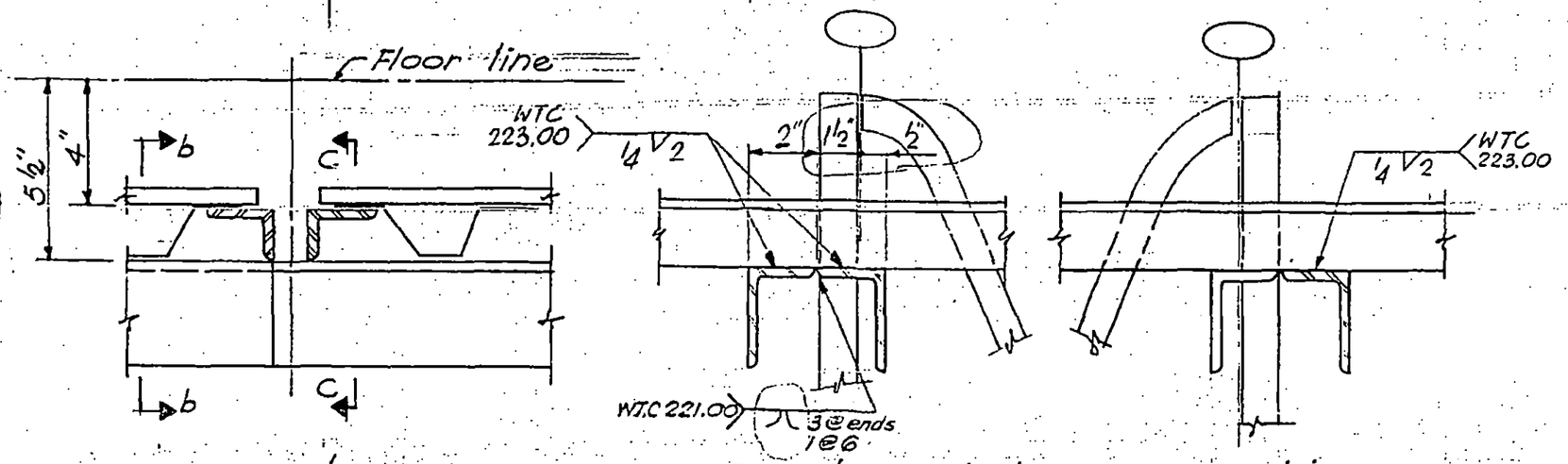

Section a-a Section b-b Section c-c

LICENSED PROFESSIONAL ENGINEER
LESLIE E. ROBERTSON
No. 34360
UNIVERSITY OF THE STATE OF NEW YORK

7-AB4-24

SKILLING - HELLE - CHRISTIANSEN - ROBERTSON Structural & Civil Engineers

PROJECT THE WORLD TRADE CENTER | TITLE FLOOR PANEL - DETAIL E44 | DATE 1-3-68

REVISIONS

4-1-68
7-22-68

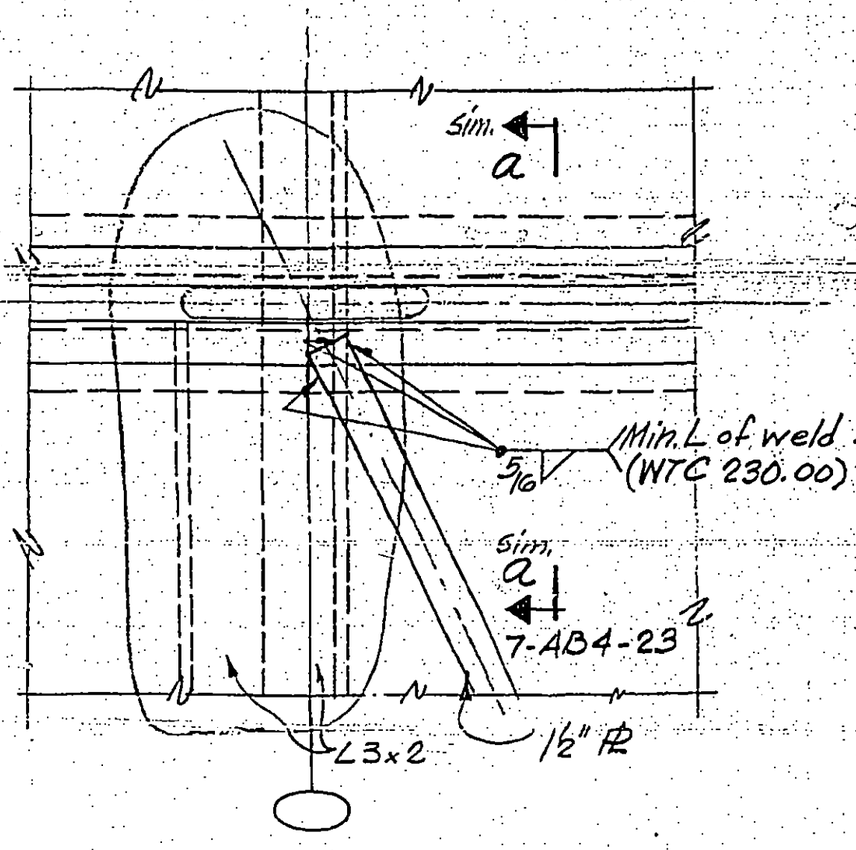

7-AB4-25

SKILLING - HELLE - CHRISTIANSEN - ROBERTSON Structural & Civil Engineers

PROJECT THE WORLD TRADE CENTER | TITLE FLOOR PANEL - DETAIL E47 & E48 | DATE 1-3-68

REVISIONS

7-22-68

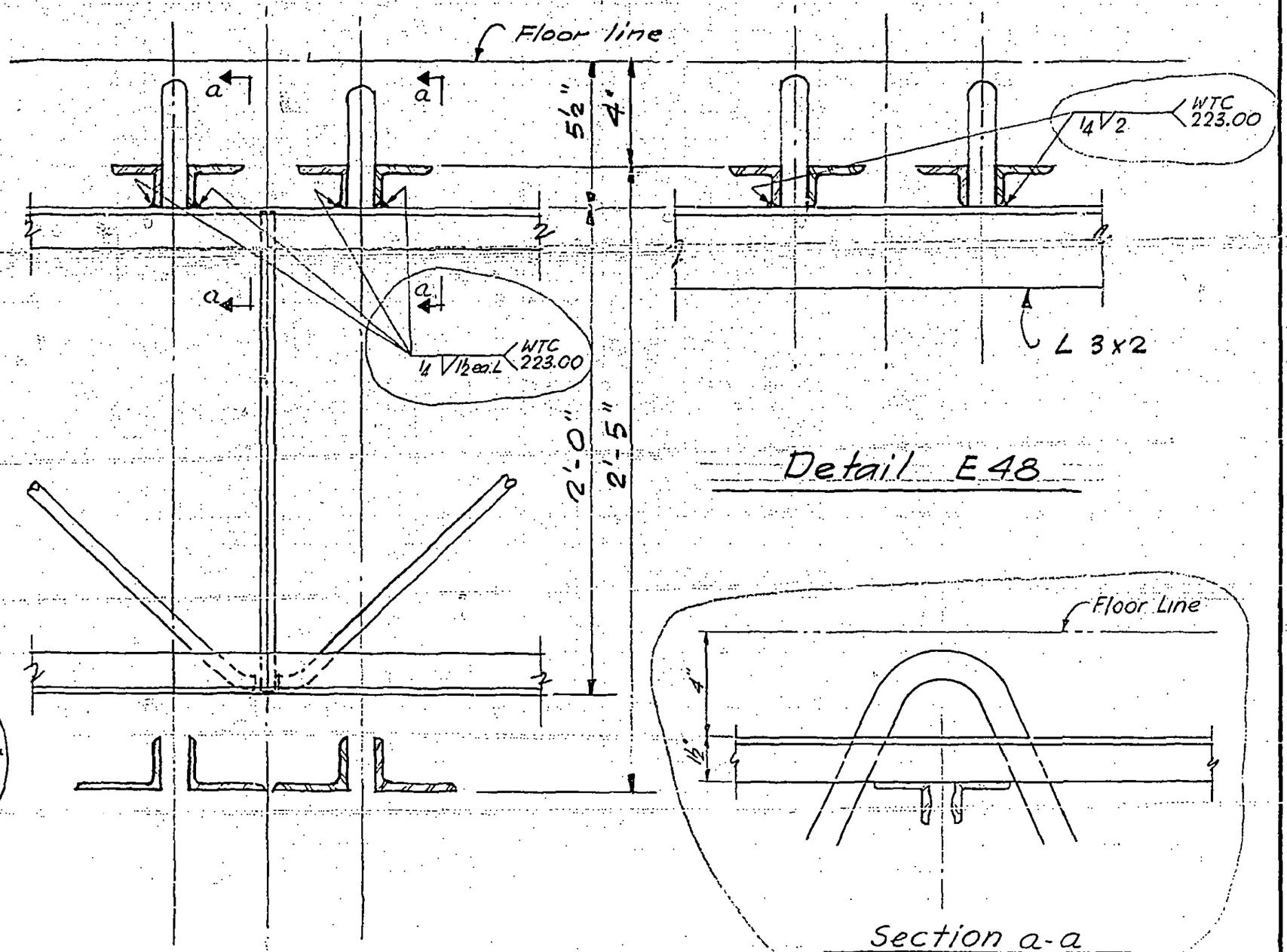

Detail E48

Detail E47

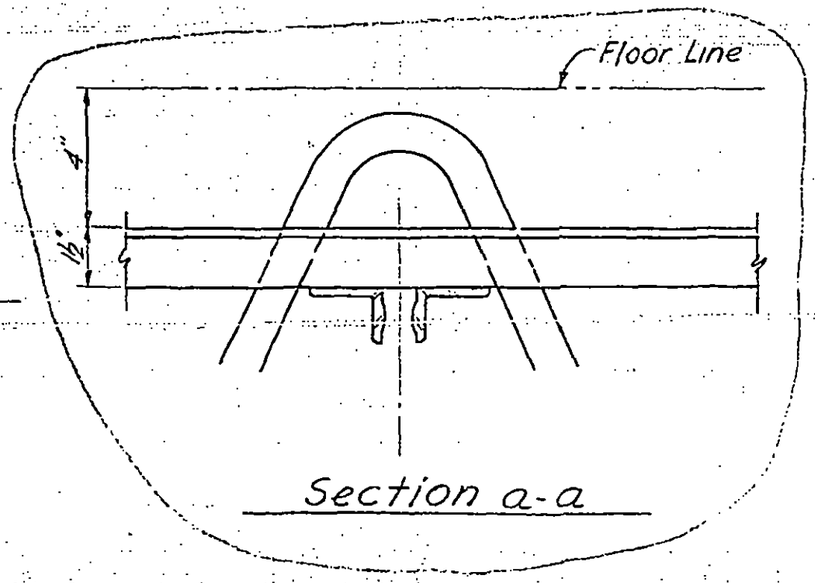

Section a-a

LICENSED PROFESSIONAL ENGINEER
LESLIE E. ROBERTSON
No. 34360
UNIVERSITY OF THE STATE OF NEW YORK

7-AB4-28

79

SKILLING, HELLE, CHRISTIANSEN, ROBERTSON — Structural & Civil Engineers

PROJECT	TITLE	DATE
THE WORLD TRADE CENTER	FLOOR PANEL - DETAIL E47A	7-22-68

REVISIONS

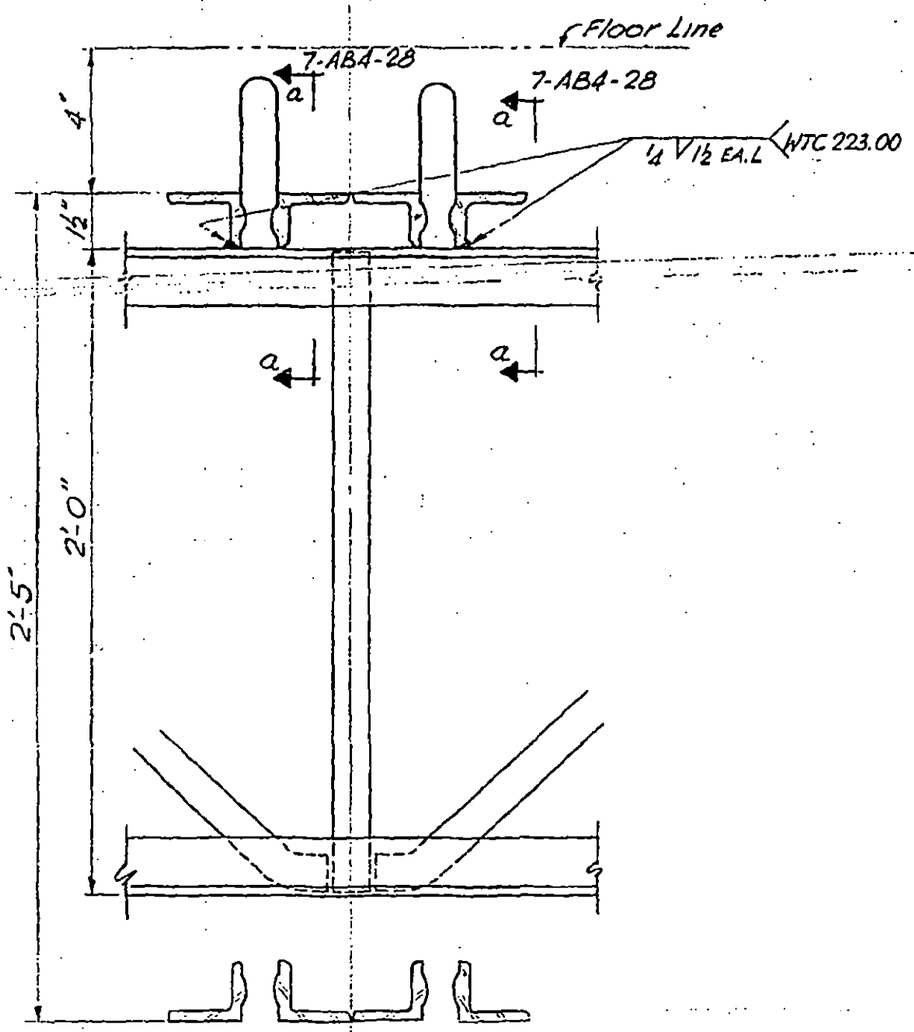

LICENSED PROFESSIONAL ENGINEER
LESLIE E. ROBERTSON
No. 34360
UNIVERSITY OF THE STATE OF NEW YORK

DESIGNED

DRAWN

REVIEWED

80

7-AB4-2A1

SKILLING - HELLE - CHRISTIANSEN - ROBERTSON Structural & Civil Engineers

PROJECT THE WORLD TRADE CENTER | TITLE FLOOR PANEL DETAIL E49, E49A | DATE 10-20-67

REVISIONS

1-3-68

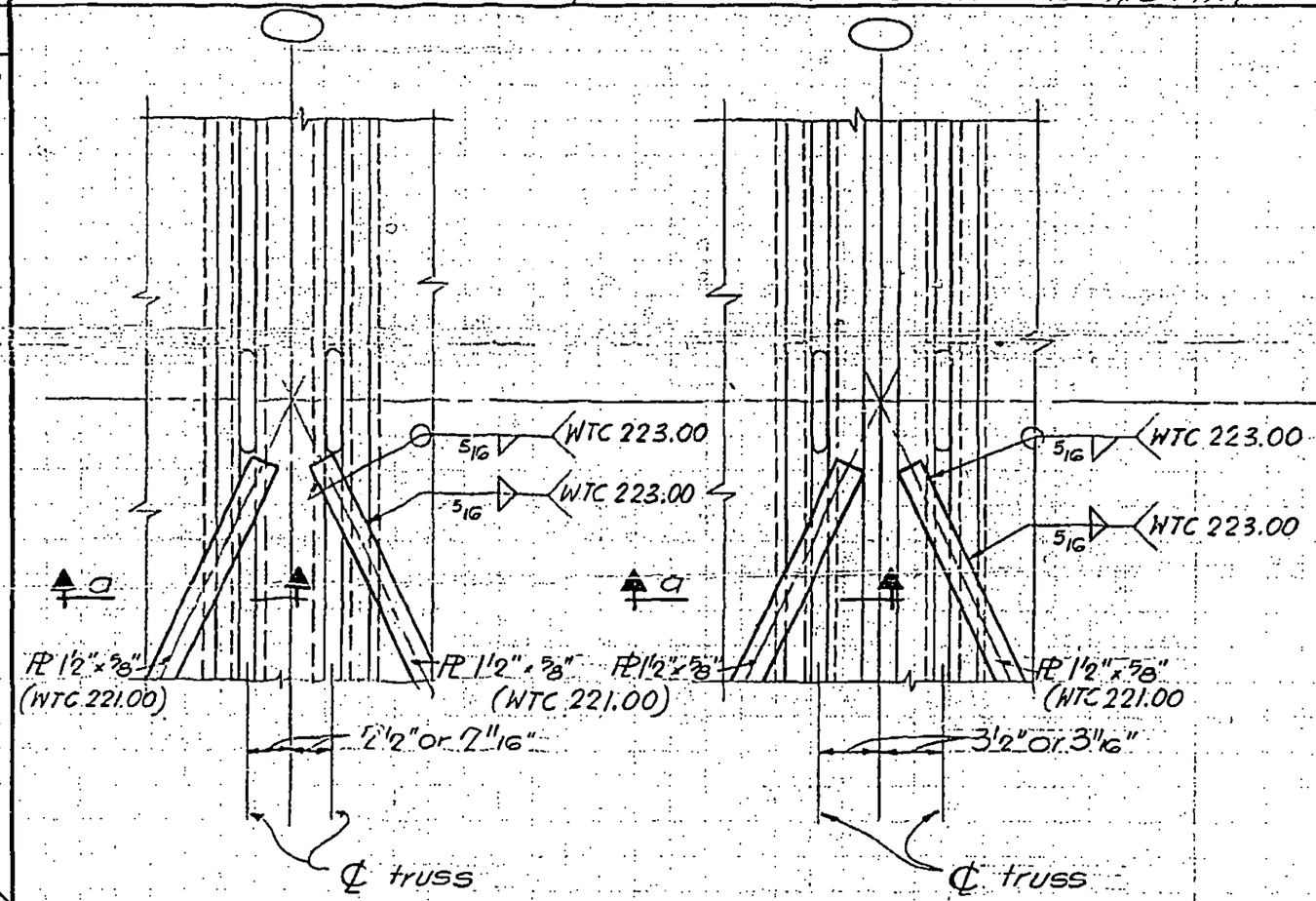

Detail E49

Detail E49A

Note - For exterior end of PL 1'2" x 5/8" see Det E50 E51 & E52

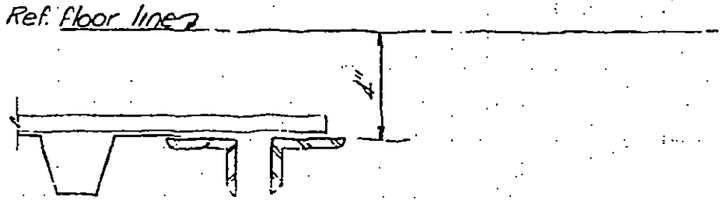

Section a-a

LICENSED PROFESSIONAL ENGINEER
LESLIE E. ROBERTSON
No. 34300
UNIVERSITY OF THE STATE OF NEW YORK

7-AB4-29

SKILLING - HELLE - CHRISTIANSEN - ROBERTSON Structural & Civil Engineers

PROJECT THE WORLD TRADE CENTER | TITLE FLOOR PANEL DETAIL E50 | DATE 10-20-67

REVISIONS
1-3-68
4-1-68

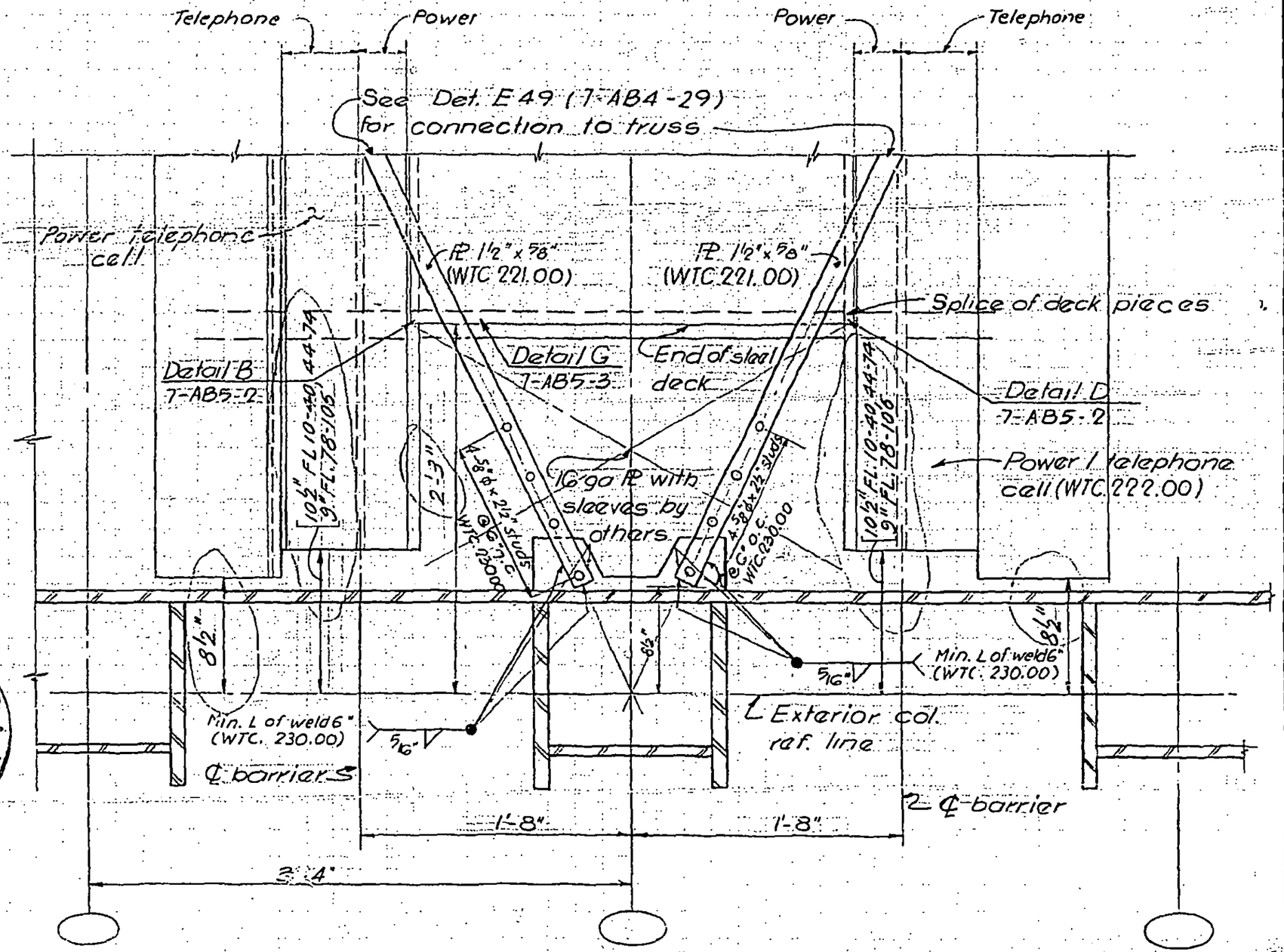

LICENSED PROFESSIONAL ENGINEER LESLIE E. ROBERTSON No. 24360 UNIVERSITY OF THE STATE OF NEW YORK

81

7-AB4-30

SKILLING - HELLE - CHRISTIANSEN - ROBERTSON Structural & Civil Engineers

PROJECT THE WORLD TRADE CENTER | TITLE FLOOR PANEL DETAIL E51(A) | DATE 10-20-67

REVISIONS
1-3-68
4-1-68

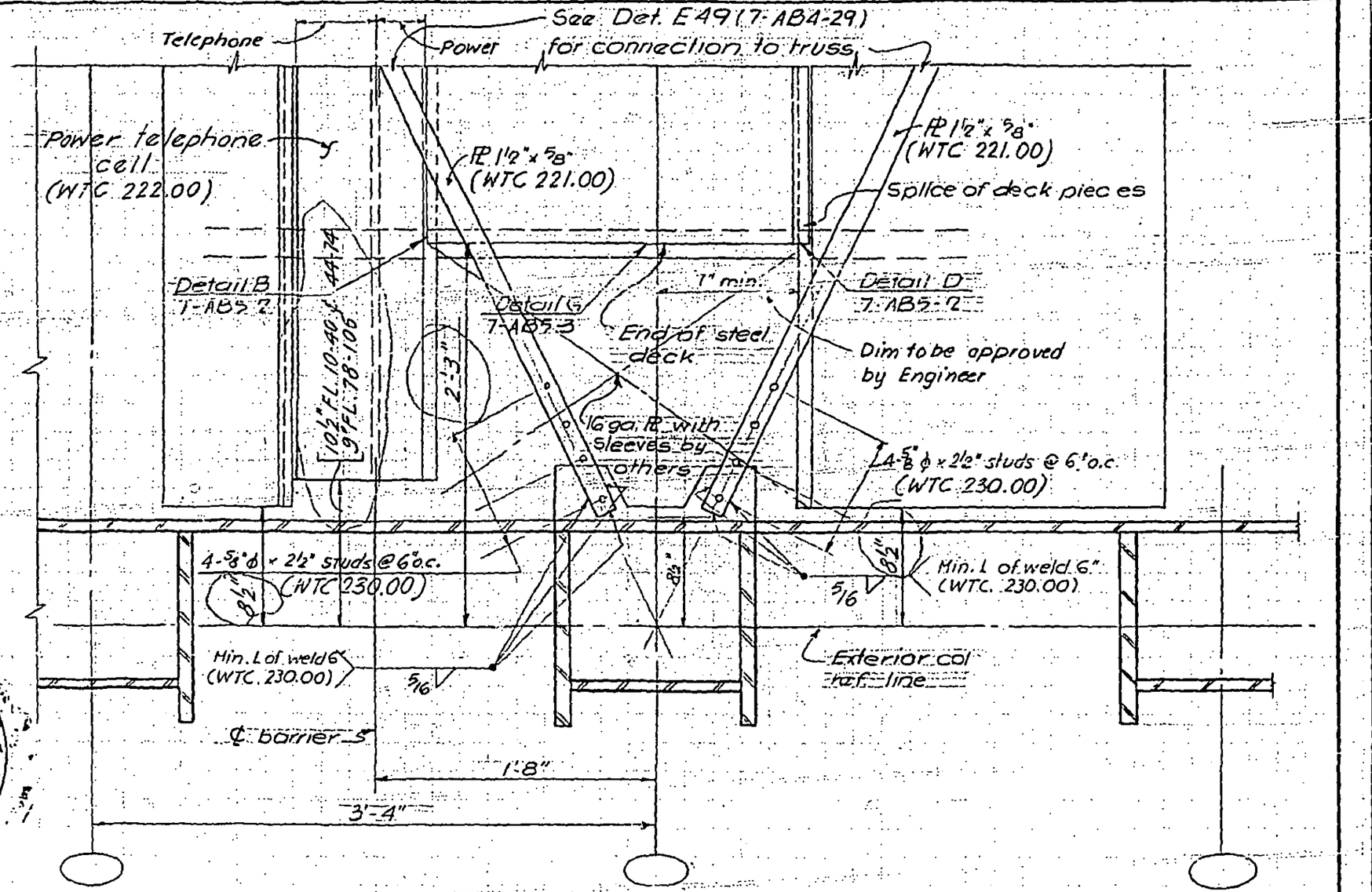

REGISTERED PROFESSIONAL ENGINEER LESLIE E ROBERTSON No. 9496 STATE OF CALIFORNIA

F2

SKILLING - HELLE - CHRISTIANSEN - ROBERTSON Structural & Civil Engineers

PROJECT THE WORLD TRADE CENTER | TITLE FLOOR PANEL DETAIL E51B & E51C | DATE 4-1-68

REVISIONS

Note:
See Detail E51A for all information not shown.

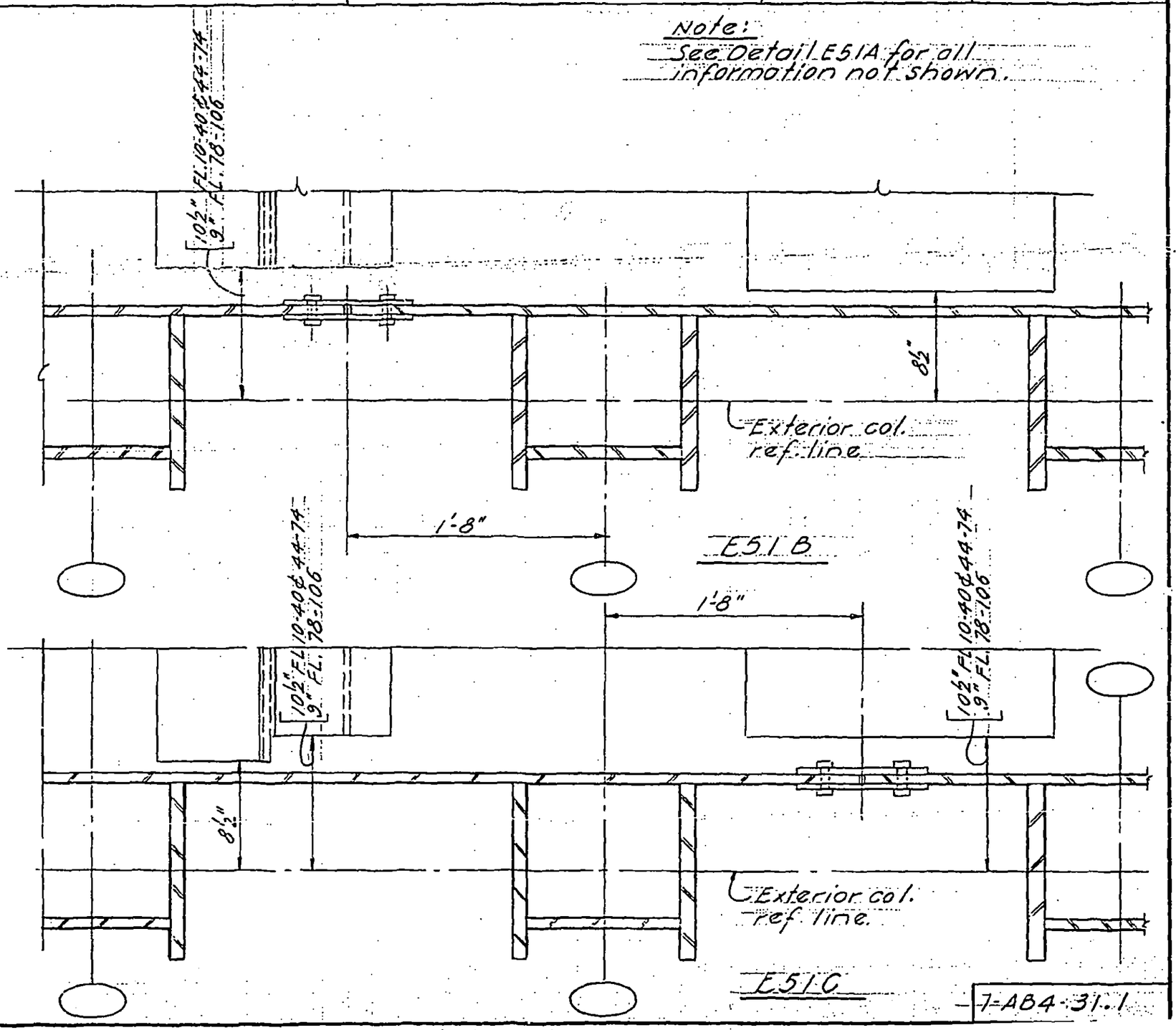

LICENSED PROFESSIONAL ENGINEER
LESLIE E. ROBERTSON
No. 34360
UNIVERSITY OF THE STATE OF NEW YORK

7-AB4-31.1

SKILLING, HELLE, CHRISTIANSEN, ROBERTSON — Structural & Civil Engineers

PROJECT: THE WORLD TRADE CENTER | TITLE: FLOOR PANEL-DETAIL E 51D, E52D | DATE: 1-20-69

REVISIONS

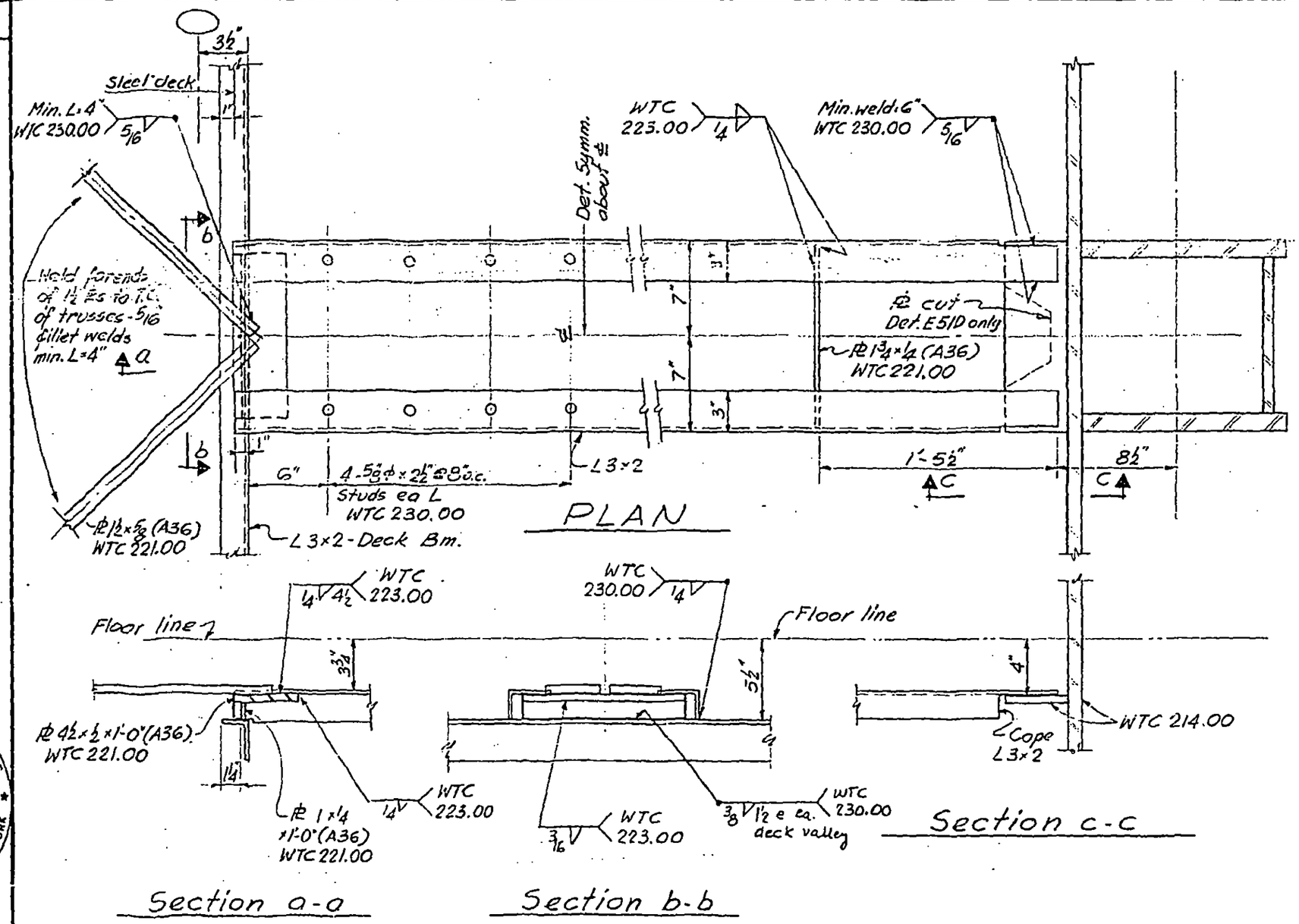

LICENSED PROFESSIONAL ENGINEER
LESLIE E. ROBERTSON
No. 34360
UNIVERSITY OF THE STATE OF NEW YORK

DESIGNED

DRAWN

REVIEWED

SKILLING - HELLE - CHRISTIANSEN - ROBERTSON — Structural & Civil Engineers

PROJECT THE WORLD TRADE CENTER | TITLE FLOOR PANEL DETAIL E52A | DATE 10-20-67

REVISIONS
1-3-68
4-1-68

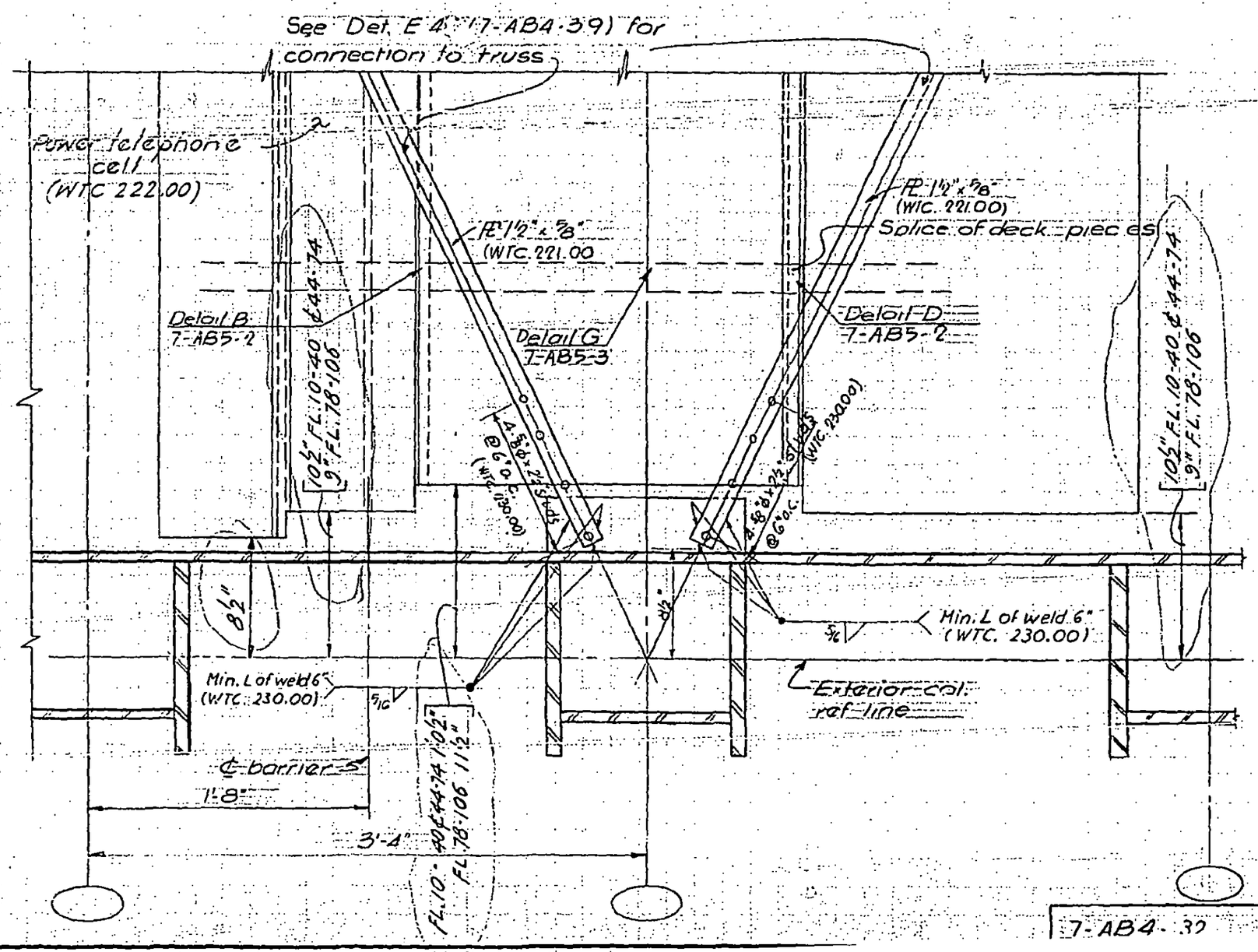

LICENSED PROFESSIONAL ENGINEER LESLIE E. ROBERTSON No. 34360 STATE OF NEW YORK

7-AB4.32

SKILLING - HELLE - CHRISTIANSEN - ROBERTSON Structural & Civil Engineers

PROJECT THE WORLD TRADE CENTER | TITLE FLOOR PANEL DETAIL E52B & E52C | DATE 4-1-68

REVISIONS

Note:
See Detail E52A for all information not shown.

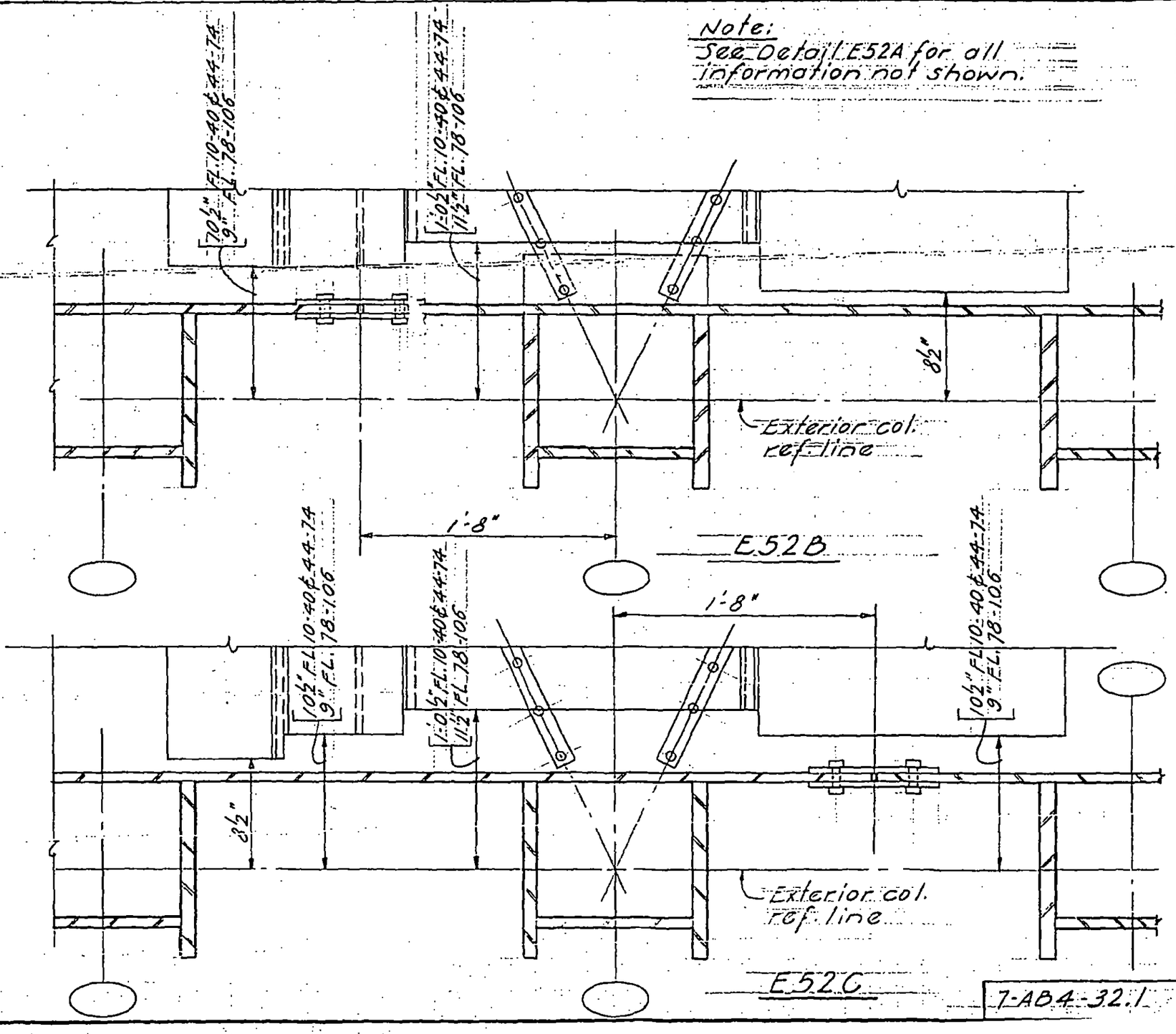

7-AB4-32.1

LICENSED PROFESSIONAL ENGINEER LESLIE E. ROBERTSON

95

SKILLING - HELLE - CHRISTIANSEN - ROBERTSON Structural & Civil Engineers

PROJECT THE WORLD TRADE CENTER | TITLE FLOOR PANEL DETAIL E 53 | DATE 1-3-68

REVISIONS

4-1-68

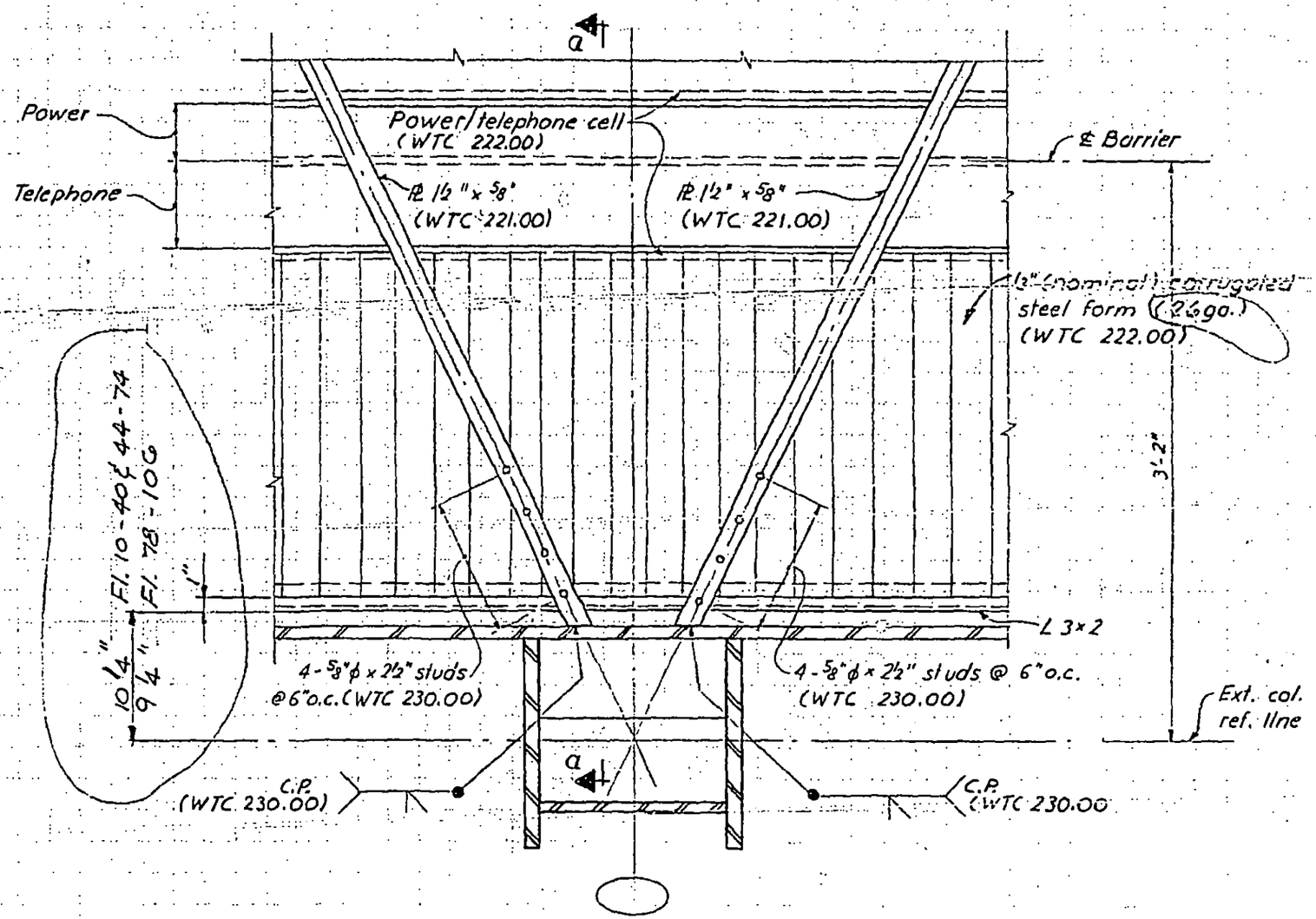

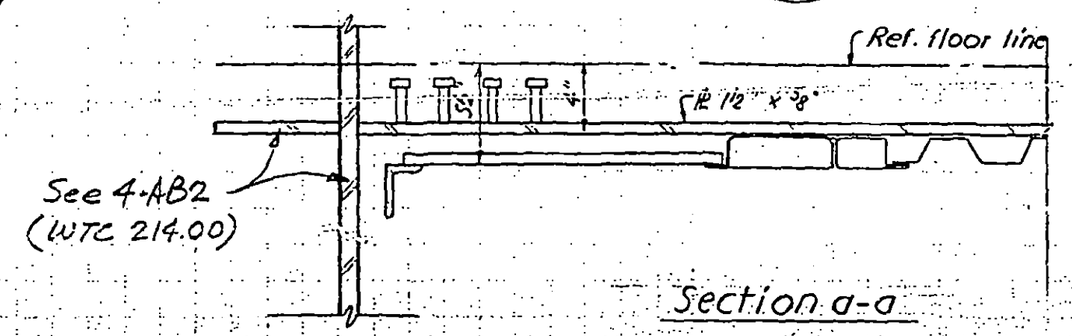

Section a-a

7-AB4-33

LESLIE E. ROBERTSON No. 34360 LICENSED PROFESSIONAL ENGINEER UNIVERSITY OF THE STATE OF NEW YORK

SKILLING - HELLE - CHRISTIANSEN – ROBERTSON Structural & Civil Engineers

PROJECT THE WORLD TRADE CENTER | TITLE FLOOR PANEL DETAIL E54 | DATE 1-3-68

REVISIONS

4-1-68

10-15-68

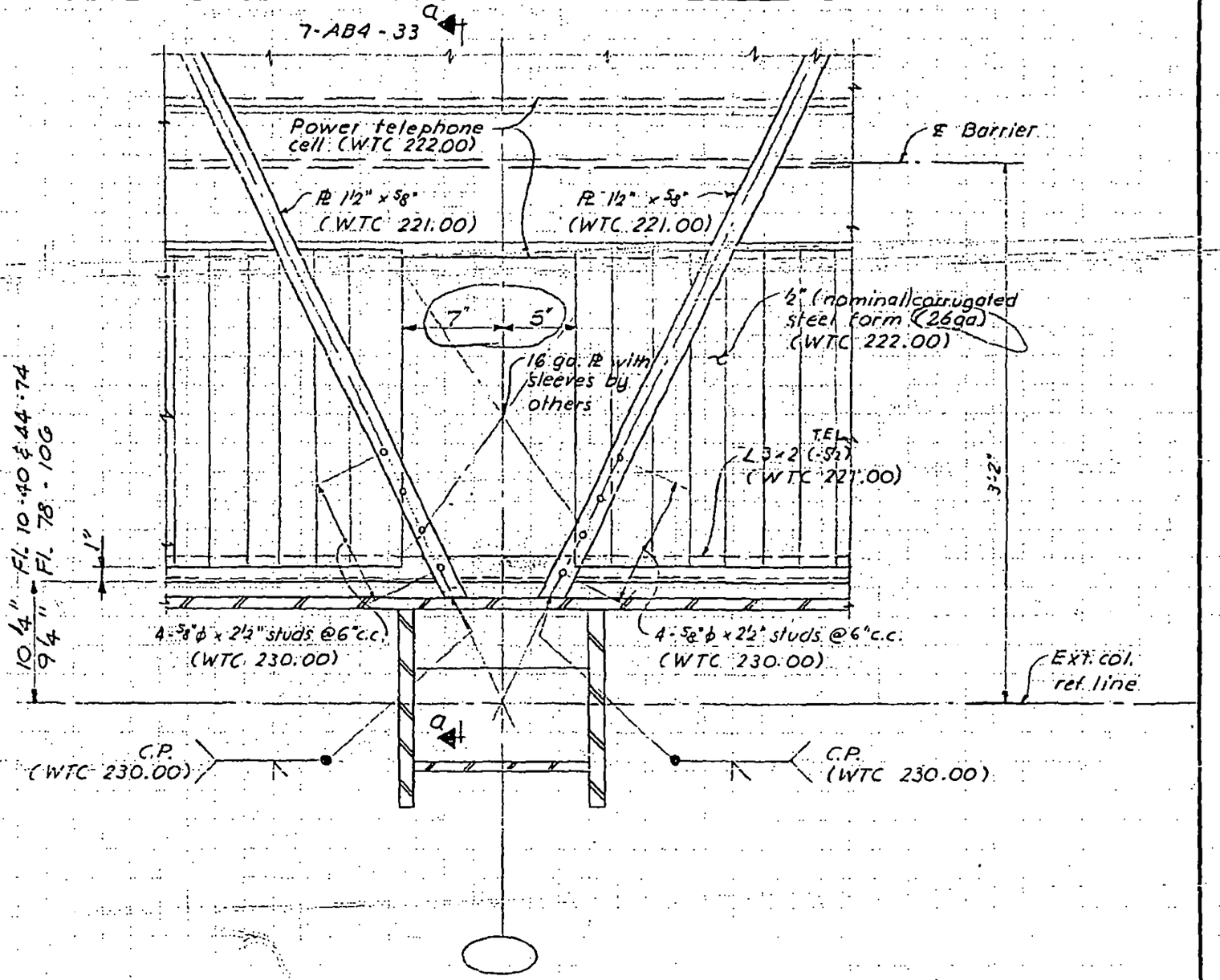

LICENSED PROFESSIONAL ENGINEER
LESLIE E. ROBERTSON
No. 34360
UNIVERSITY OF THE STATE OF NEW YORK

87

7-AB4-34

SKILLING, HELLE, CHRISTIANSEN, ROBERTSON — Structural & Civil Engineers

PROJECT: THE WORLD TRADE CENTER | TITLE: FLOOR PANEL DETAIL E 54 A | DATE: 1-20-69

REVISIONS

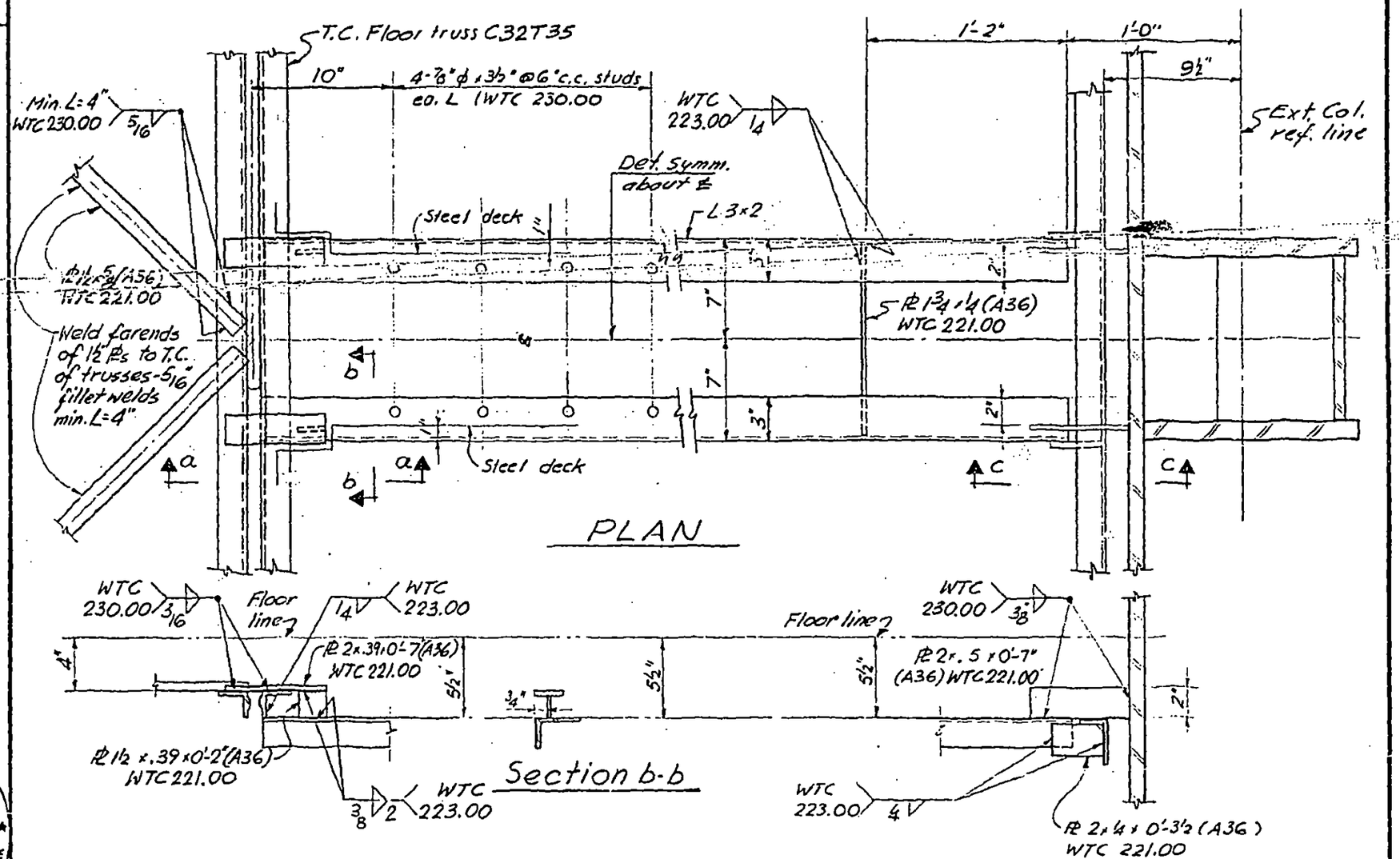

Section a-a

Section c-c

LICENSED PROFESSIONAL ENGINEER — LESLIE E. ROBERTSON — No. 34360 — UNIVERSITY OF THE STATE OF NEW YORK

DESIGNED

DRAWN

REVIEWED

7-AB4-34.1

SKILLING - HELLE - CHRISTIANSEN - ROBERTSON Structural & Civil Engineers

PROJECT	TITLE	DATE
THE WORLD TRADE CENTER	FLOOR PANEL DETAIL E 55	1-3-68

REVISIONS

4-1-68

10-15-68

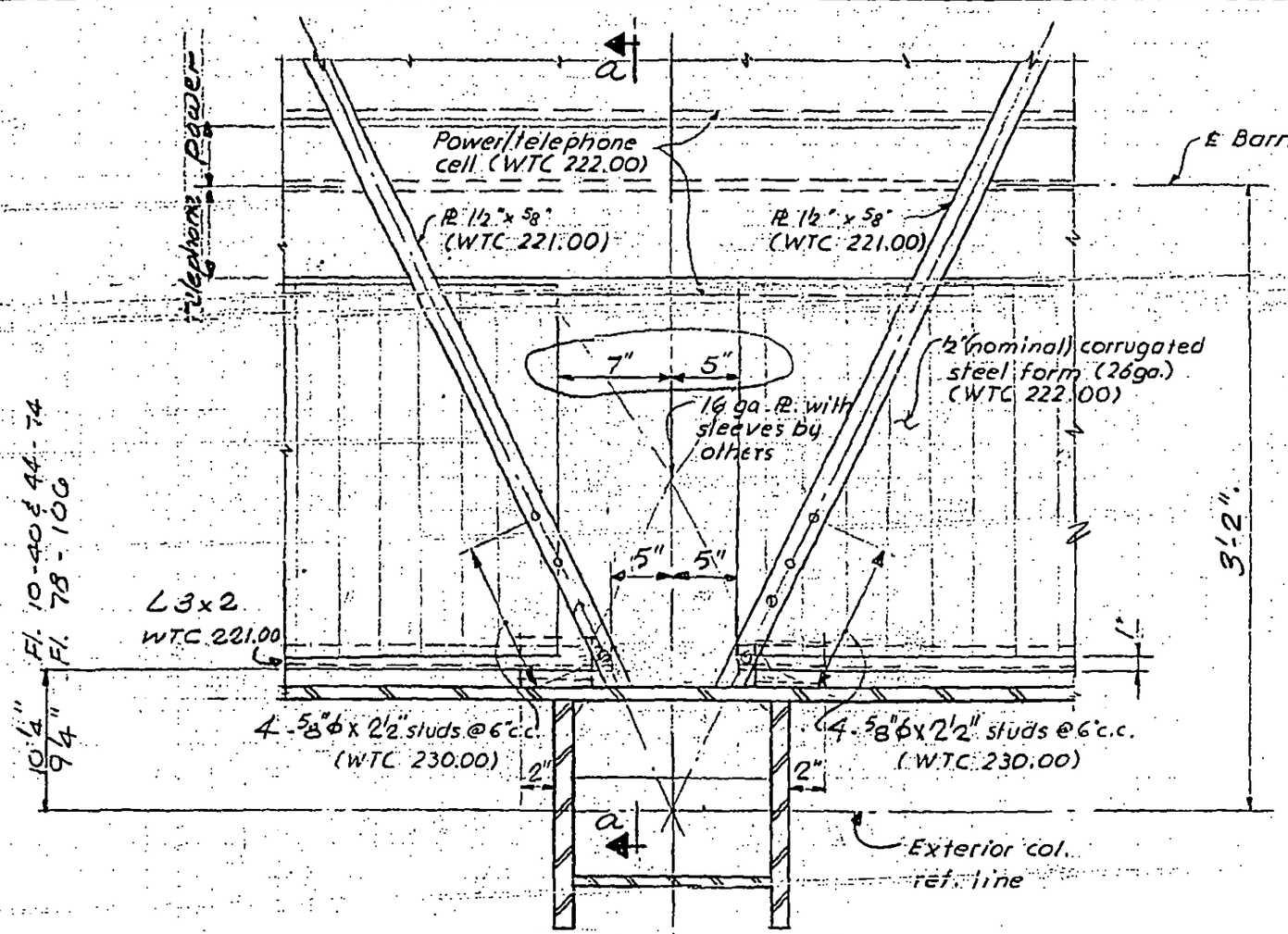

Plan

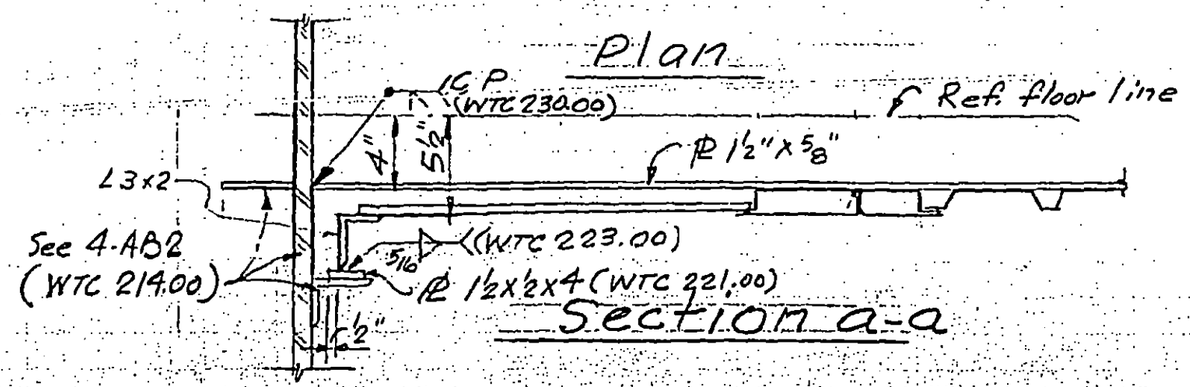

Section a-a

LICENSED PROFESSIONAL ENGINEER LESLIE E. ROBERTSON No. 34360 UNIVERSITY OF THE STATE OF NEW YORK

7-AB4-3.5

SKILLING - HELLE - CHRISTIANSEN - ROBERTSON Structural & Civil Engineers

PROJECT THE WORLD TRADE CENTER | TITLE FLOOR PANEL DETAIL E56 | DATE 1-3-68

REVISIONS

4-1-68
7-22-68
10-15-68

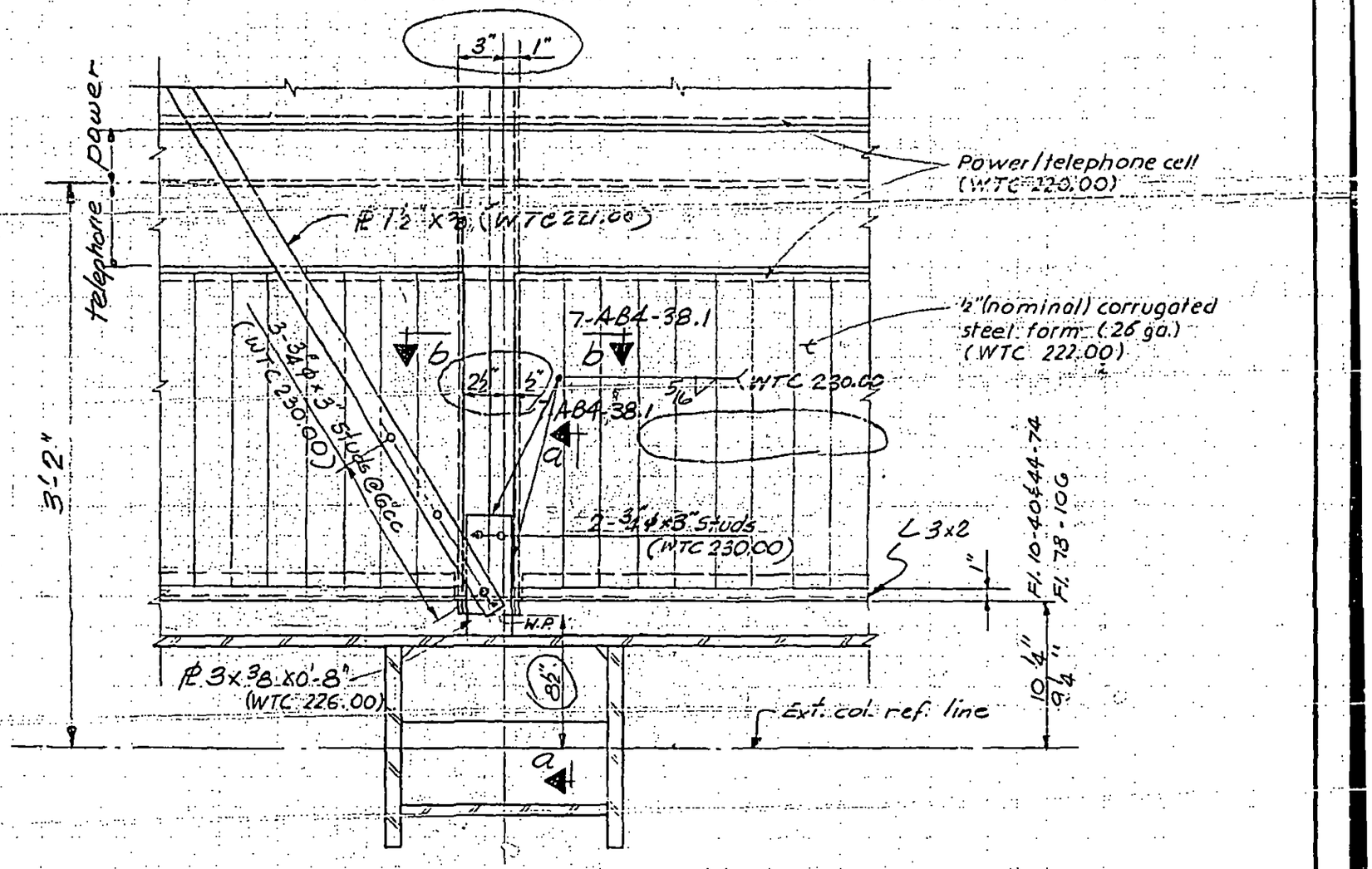

LICENSED PROFESSIONAL ENGINEER
LESLIE E. ROBERTSON
No. 34360
OF THE STATE OF NEW YORK

81

7-AB4-36

SKILLING - HELLE - CHRISTIANSEN - ROBERTSON Structural & Civil Engineers

PROJECT THE WORLD TRADE CENTER | TITLE FLOOR PANEL DETAIL E 57 | DATE 1-3-68

REVISIONS

4-1-68
7-22-68
10-15-68

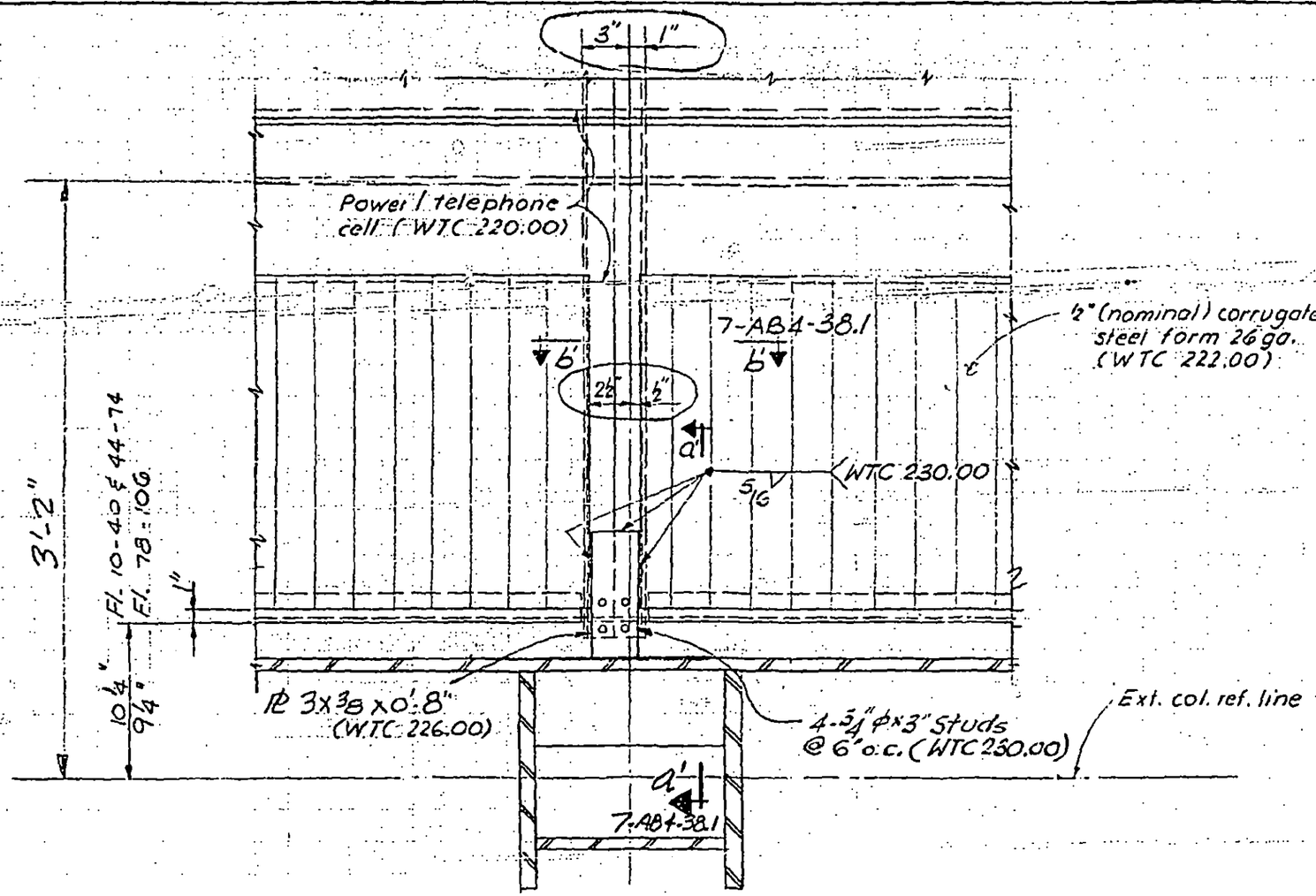

LICENSED PROFESSIONAL ENGINEER
LESLIE E. ROBERTSON
No. 34360
LICENSED BY THE STATE OF NEW YORK

82

7-AB4-37

SKILLING - HELLE - CHRISTIANSEN - ROBERTSON Structural & Civil Engineers

PROJECT THE WORLD TRADE CENTER | TITLE FLOOR PANEL DETAIL - E58, E59, E60 | DATE 1-3-68

REVISIONS

4-1-68
7-22-68
10-15-68

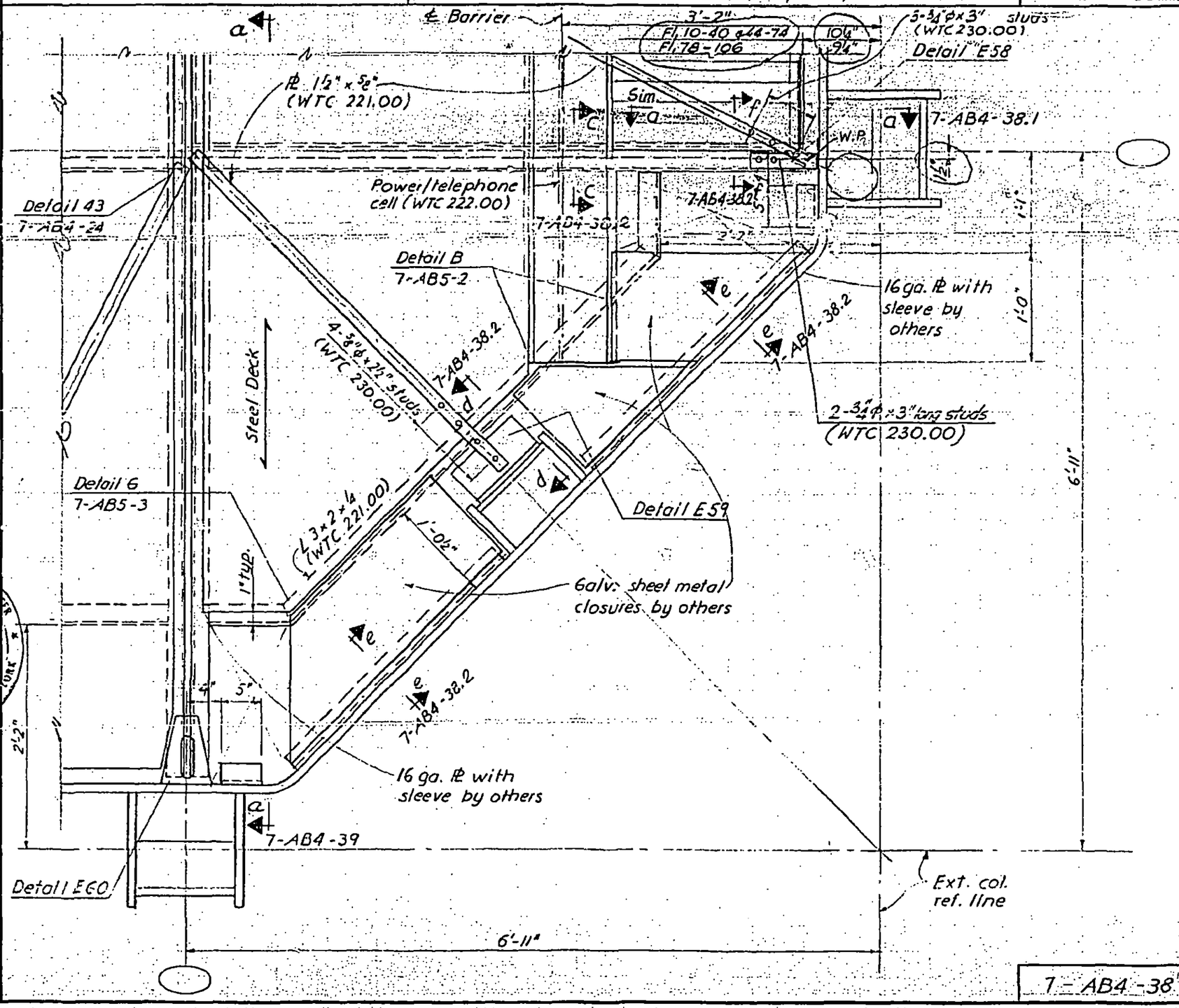

LICENSED PROFESSIONAL ENGINEER
LESLIE E. ROBERTSON
No. 34380
STATE OF NEW YORK

83

7-AB4-38

SKILLING - HELLE - CHRISTIANSEN - ROBERTSON Structural & Civil Engineers

PROJECT THE WORLD TRADE CENTER | TITLE FLOOR PANEL DETAIL E58, E57, E56 | DATE 1-3-68

REVISIONS

4-1-68
7-22-68
10-15-68

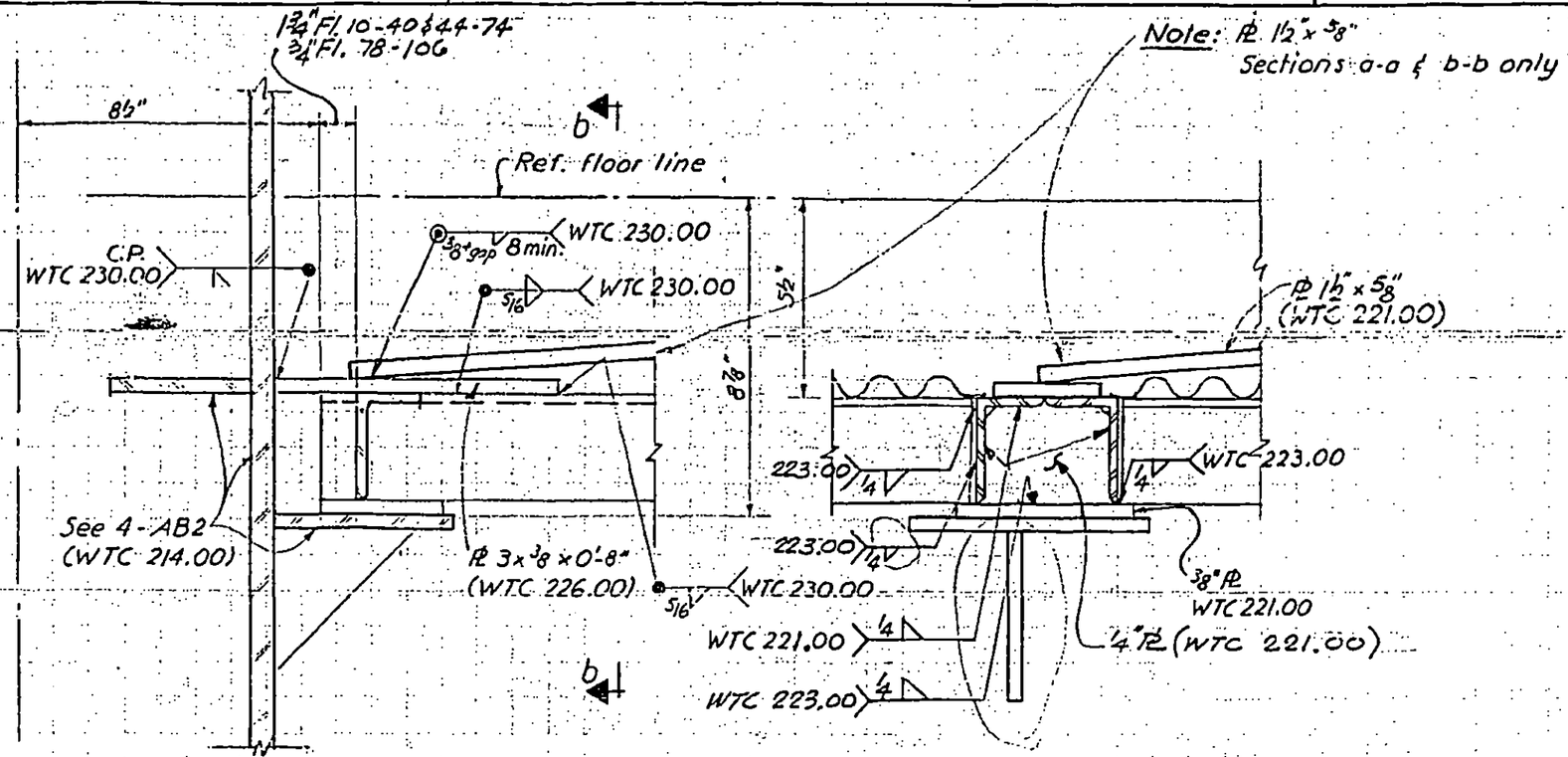

Section a-a
Section a'-a' (as noted)

Section b-b
Section b'-b' (as noted)

LICENSED PROFESSIONAL ENGINEER
LESLIE E. ROBERTSON
No. 34360
UNIVERSITY OF THE STATE OF NEW YORK

8A

7-AB4-38.1

SKILLING - HELLE - CHRISTIANSEN - ROBERTSON Structural & Civil Engineers

PROJECT THE WORLD TRADE CENTER | TITLE FLOOR PANEL DETAIL E 58, E 59 | DATE 4-1-68

REVISIONS

7-22-68
10-15-68

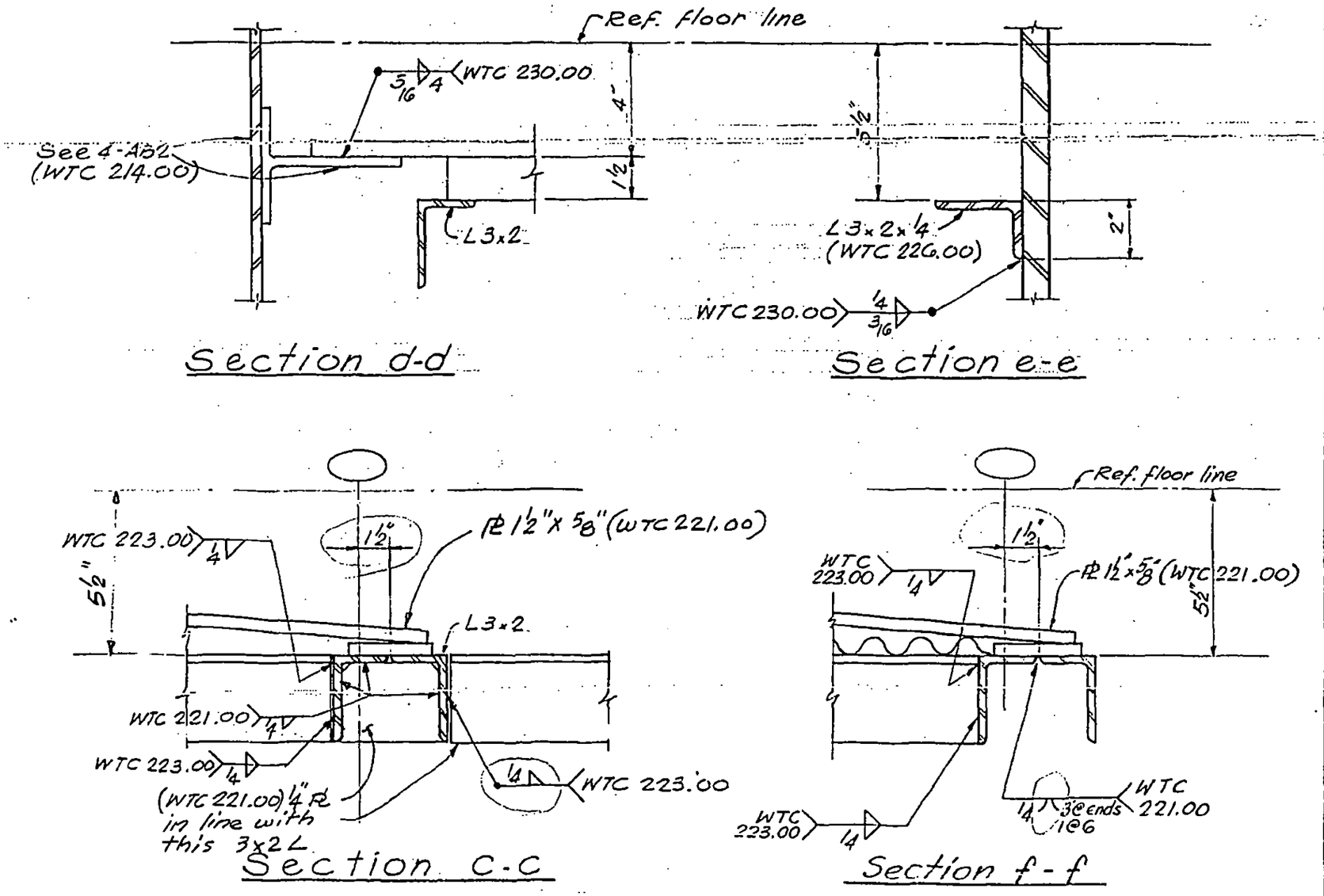

7-AB4-38.2

85

SKILLING, HELLE, CHRISTIANSEN, ROBERTSON — Structural & Civil Engineers

PROJECT: THE WORLD TRADE CENTER | TITLE: FLOOR PANEL DETAIL E 59A | DATE: 1-20-69

REVISIONS

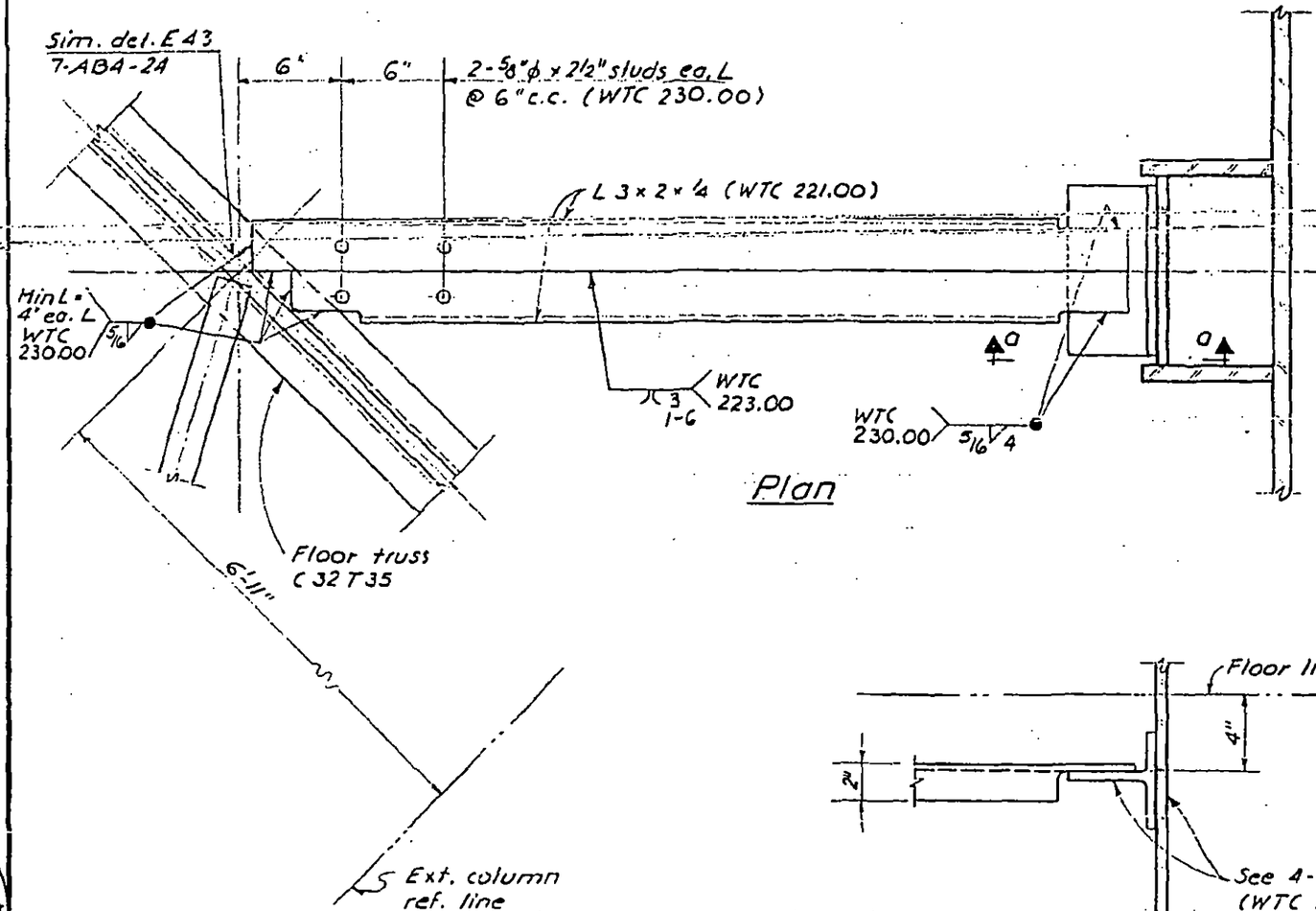

Plan

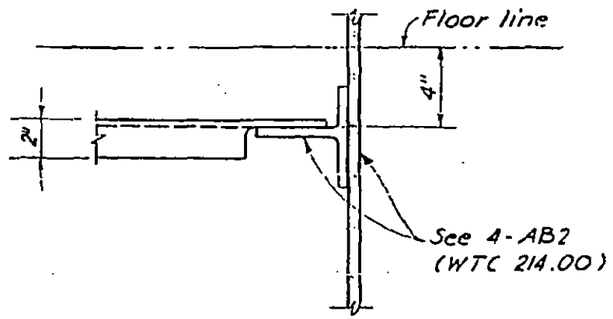

Section a-a

LICENSED PROFESSIONAL ENGINEER
LESLIE E. ROBERTSON
No. 34360
UNIVERSITY OF THE STATE OF NEW YORK

DESIGNED

DRAWN

REVIEWED

7-ABA-38.3

SKILLING - HELLE - CHRISTIANSEN - ROBERTSON Structural & Civil Engineers

PROJECT THE WORLD TRADE CENTER | TITLE FLOOR PANEL - DETAIL E 60 | DATE 1-3-68

REVISIONS

7-22-68

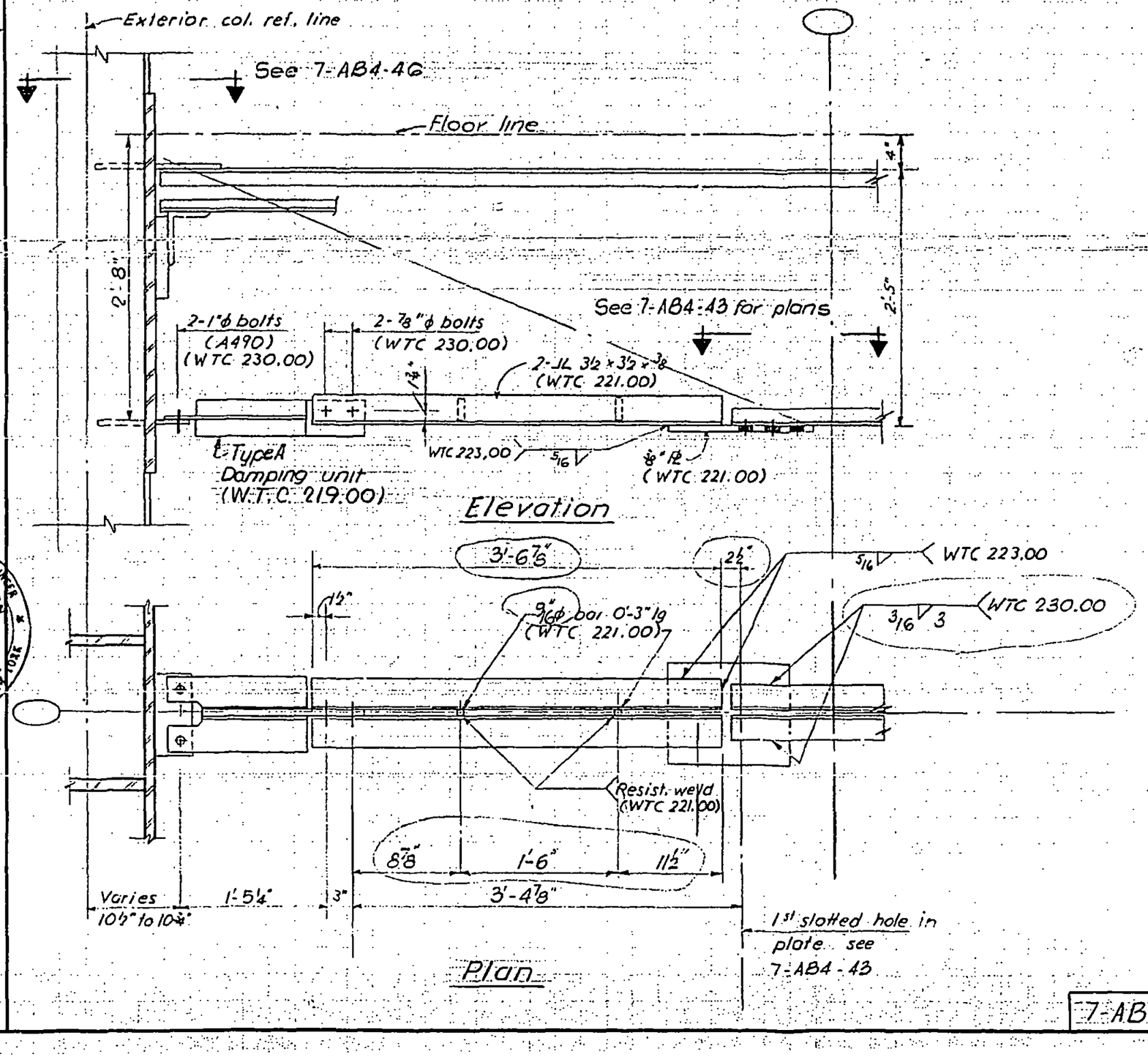

LICENSED PROFESSIONAL ENGINEER LESLIE E. ROBERTSON No. 34360 UNIVERSITY OF THE STATE OF NEW YORK

86

7-AB4-39

SKILLING - HELLE - CHRISTIANSEN - ROBERTSON Structural & Civil Engineers

PROJECT THE WORLD TRADE CENTER | TITLE FLOOR PANEL - DETAIL EG1 TO EG7 | DATE 10-20-67

REVISIONS

1-3-68
7-22-68

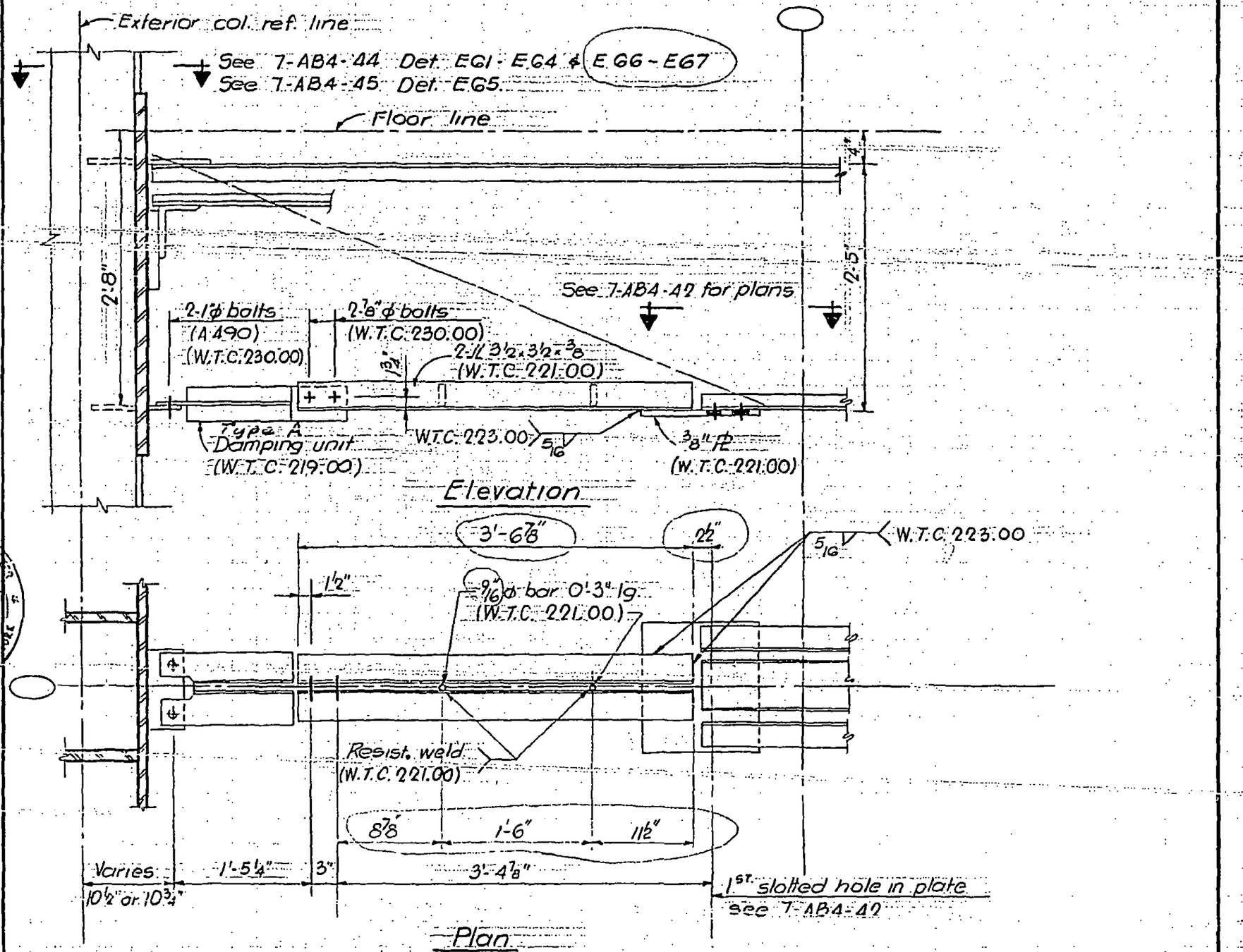

LICENSED PROFESSIONAL ENGINEER LESLIE E. ROBERTSON No. 34930 STATE OF NEW YORK

7-AB4-40

SKILLING - HELLE - CHRISTIANSEN - ROBERTSON Structural & Civil Engineers

PROJECT THE WORLD TRADE CENTER | TITLE FLOOR PANEL - DETAIL E G8(A) | DATE 10-20-67

REVISIONS

1-3-68
7-22-68

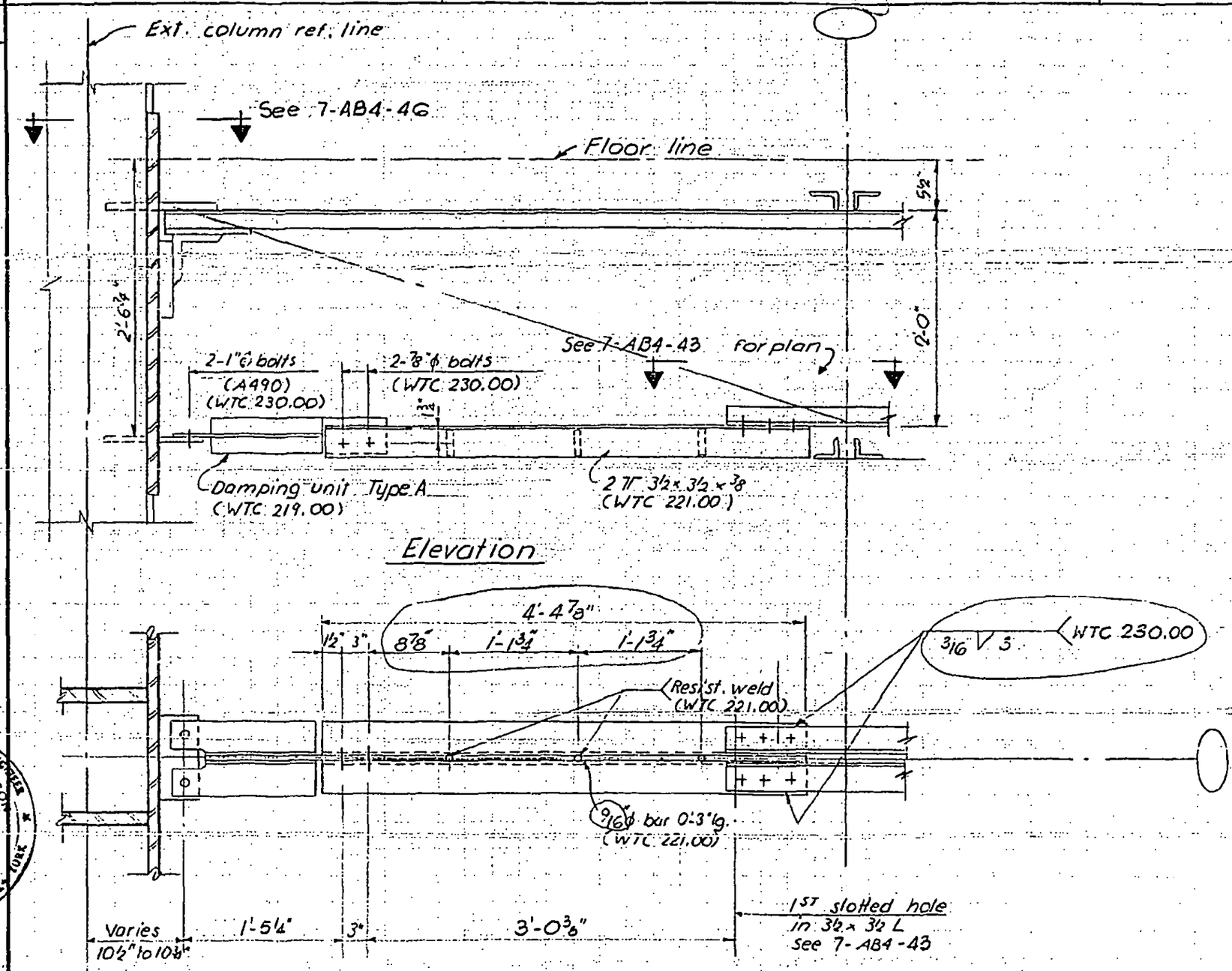

REGISTERED PROFESSIONAL ENGINEER LESLIE E. ROBERTSON No. 34360 DEPARTMENT OF THE STATE OF NEW YORK

7-AB4-41

SKILLING, HELLE, CHRISTIANSEN, ROBERTSON — Structural & Civil Enginoors

PROJECT THE WORLD TRADE CENTER | TITLE FLOOR PANEL - DETAIL E68 | DATE 7-22-68

REVISIONS

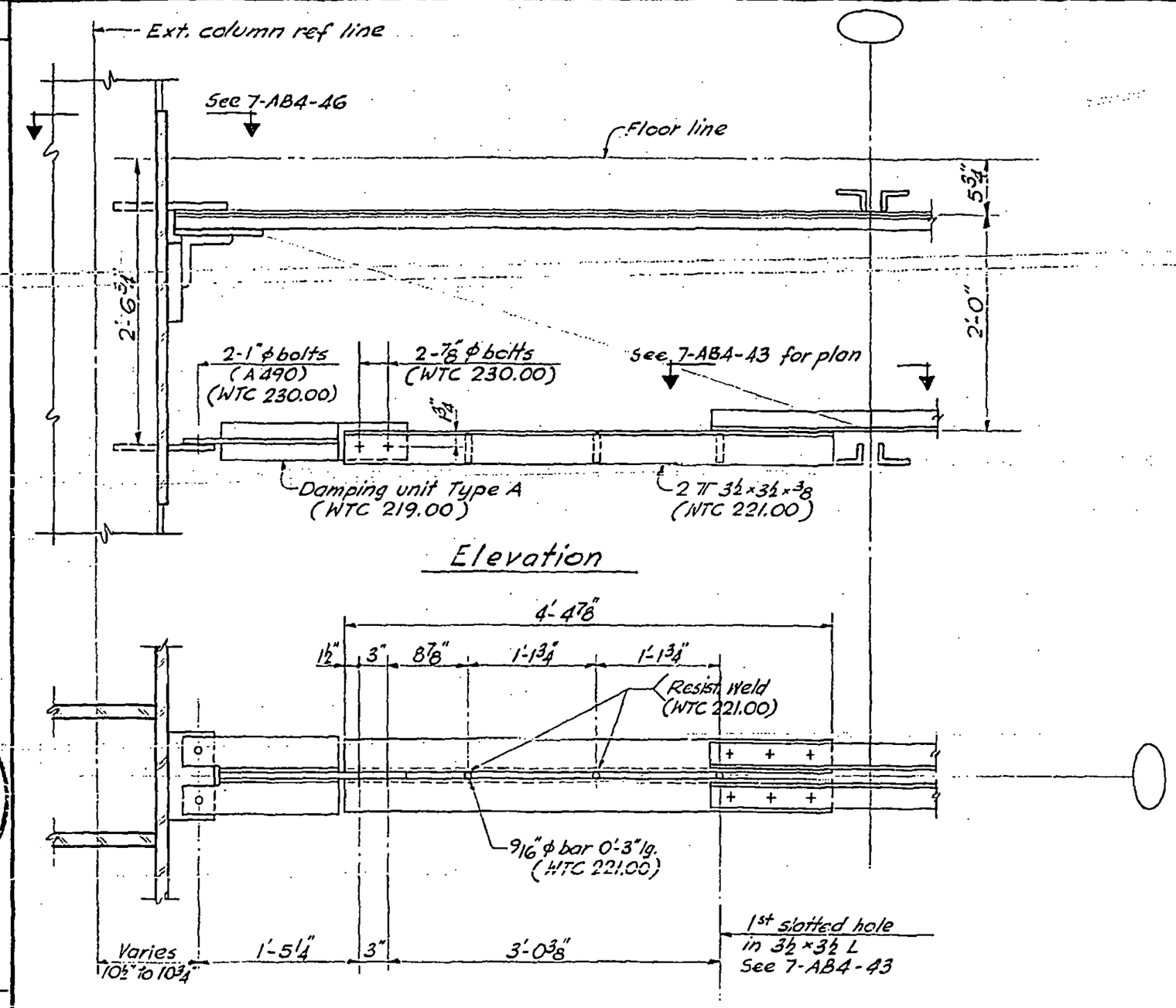

LICENSED PROFESSIONAL ENGINEER LESLIE E. ROBERTSON No. 34960 STATE OF NEW YORK

DESIGNED

DRAWN

REVIEWED

89

7-AB4-41.1

SKILLING - HELLE - CHRISTIANSEN - ROBERTSON Structural & Civil Engineers

PROJECT THE WORLD TRADE CENTER | TITLE DAMPER CONNECTION DETAIL EG1 TO EG7 | DATE 10-20-67

REVISIONS

1-3-68
4-1-68
7-22-68
10-15-68

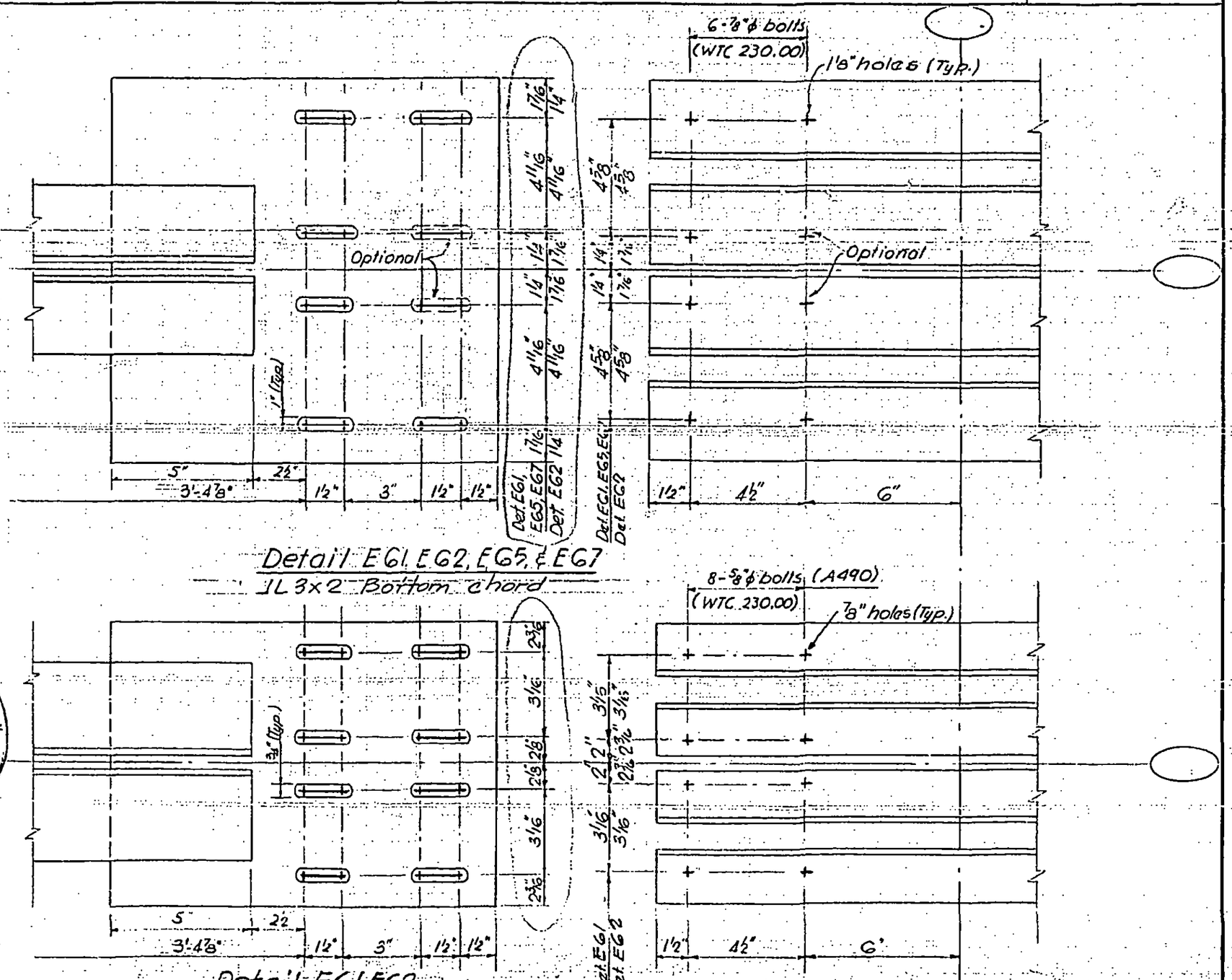

Detail EG1, EG2, EG5, & EG7
1L 3x2 Bottom chord

Detail EG1, EG2
1L 2x1½ Bottom chord

LICENSED PROFESSIONAL ENGINEER
LESLIE E. ROBERTSON
No. 34360
THE STATE OF NEW YORK

90

7-AB4-42

SKILLING - HELLE - CHRISTIANSEN - ROBERTSON Structural & Civil Engineers

PROJECT THE WORLD TRADE CENTER | TITLE DAMPER CONNECTION DETAIL E61 TO E67 | DATE 10-20-67

REVISIONS

1-3-68
4-1-68
7-22-68
10-15-68

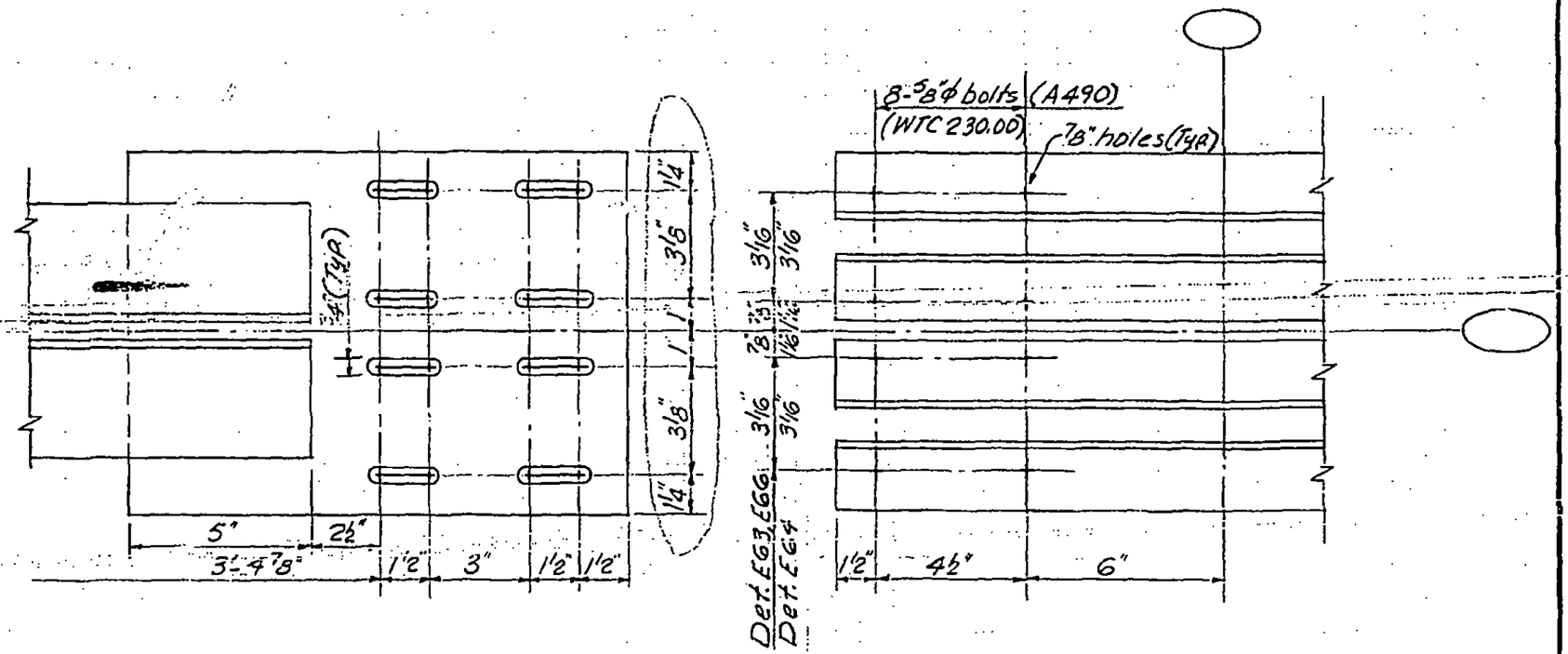

Detail E63, E64 & E66

LICENSED PROFESSIONAL ENGINEER
LESLIE E. ROBERTSON
No. 34360
UNIVERSITY OF THE STATE OF NEW YORK

T-A64-42.1

SKILLING - HELLE - CHRISTIANSEN - ROBERTSON Structural & Civil Engineers

PROJECT THE WORLD TRADE CENTER | TITLE DAMPER CONNECTION DETAIL E60, E68 & E68A | DATE 10-20-67

REVISIONS

1-3-68
7-22-68

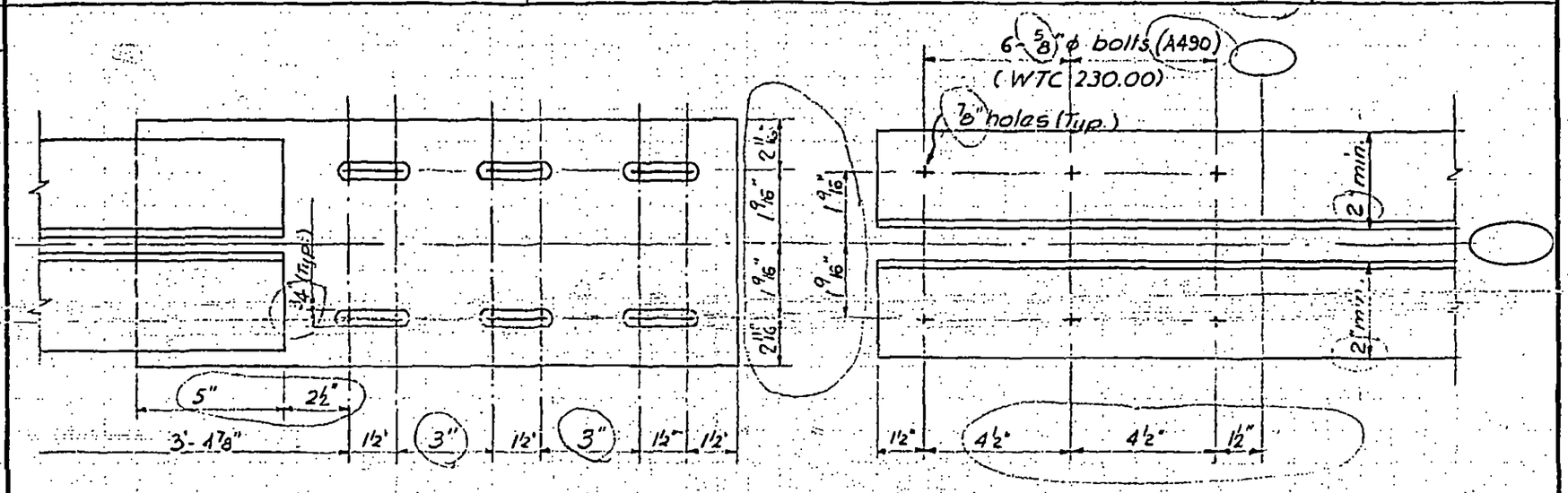

Detail E 60

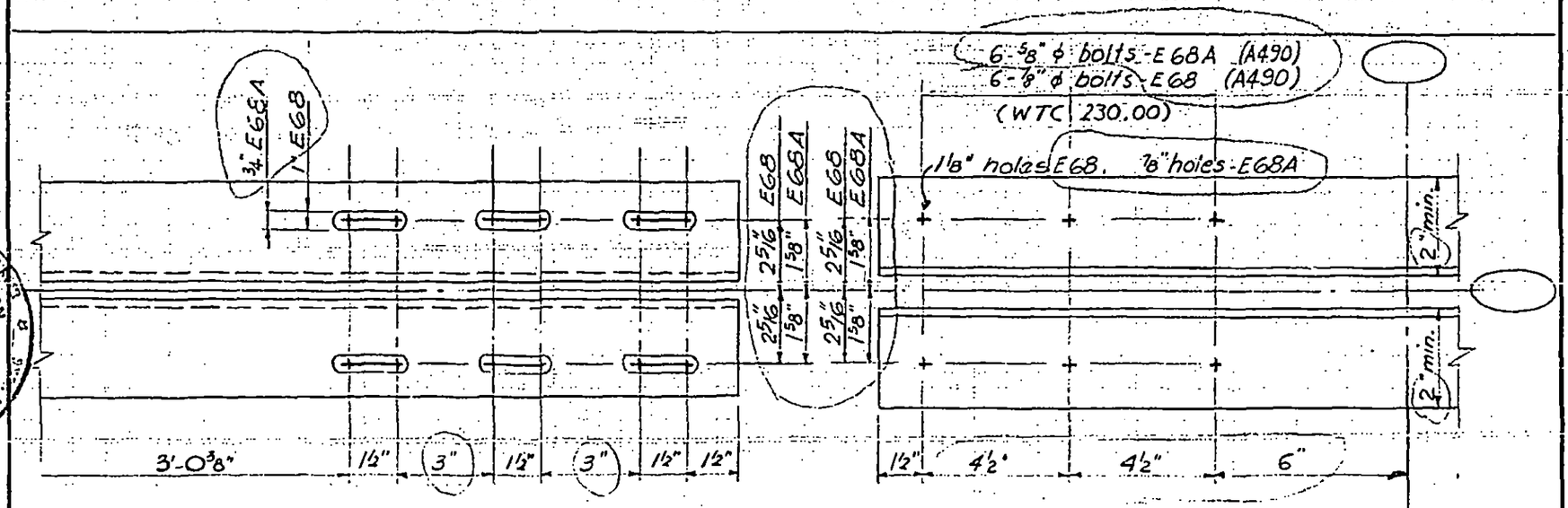

Detail E 68 & E 68A

LICENSED PROFESSIONAL ENGINEER
LESLIE E. ROBERTSON
No. 34360
STATE OF NEW YORK

92

7-AB4-43

SKILLING - HELLE - CHRISTIANSEN - ROBERTSON Structural & Civil Engineers

PROJECT THE WORLD TRADE CENTER | TITLE DETAIL EG1, EG2, EG3, EG4, EG6 & EG7 | DATE 10-20-67

REVISIONS

1-3-68

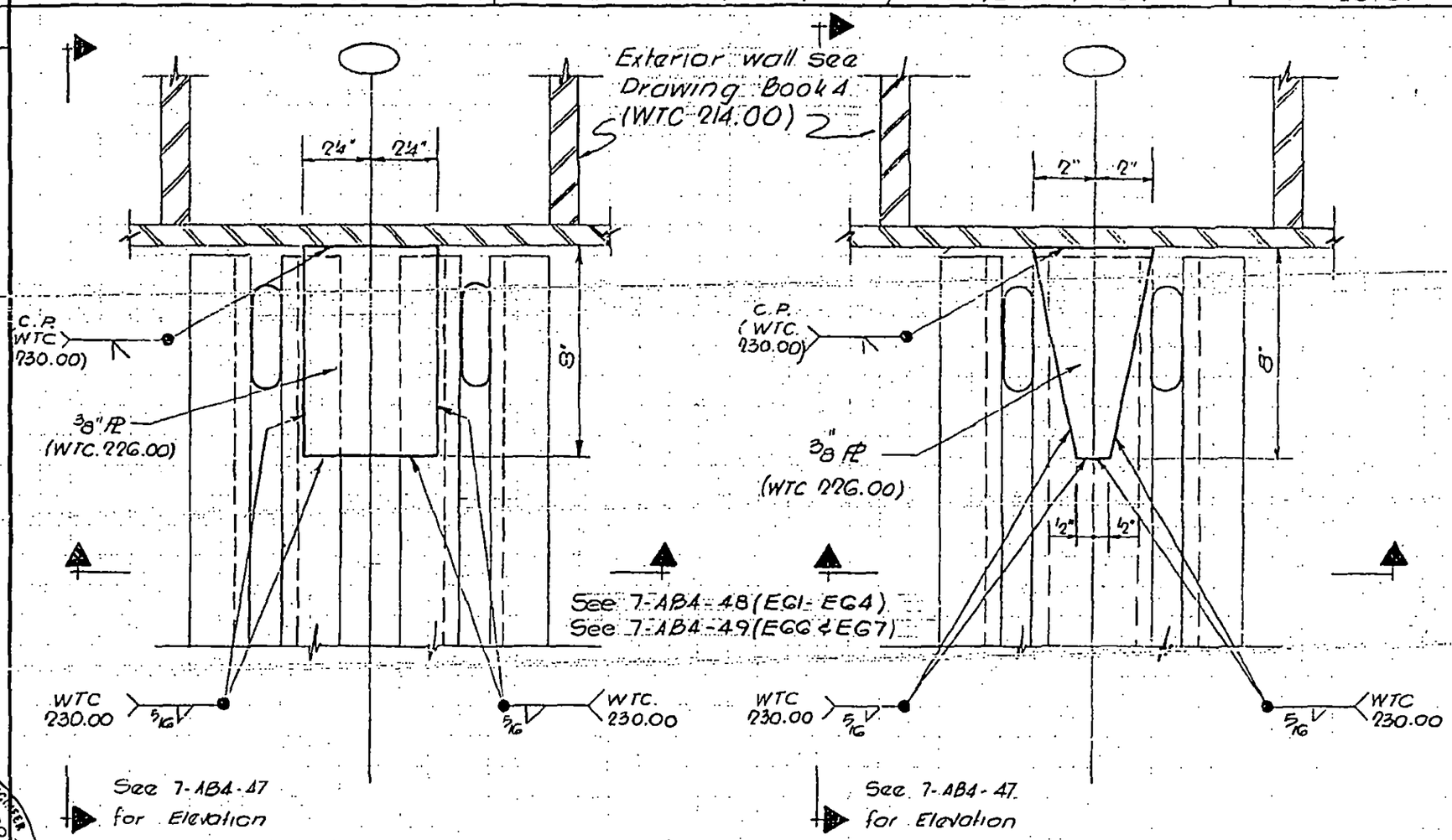

Detail EG1, EG2 & EG7

Detail EG3, EG4 & EG6

LICENSED PROFESSIONAL ENGINEER LESLIE E. ROBERTSON No. 34360 STATE OF NEW YORK

97

7-AB4-44

SKILLING - HELLE - CHRISTIANSEN - ROBERTSON Structural & Civil Engineers

PROJECT THE WORLD TRADE CENTER | TITLE FLOOR PANEL — DETAIL EG5 | DATE 1-3-68

REVISIONS

4-1-68
7-22-68
10-15-68
12-20-68

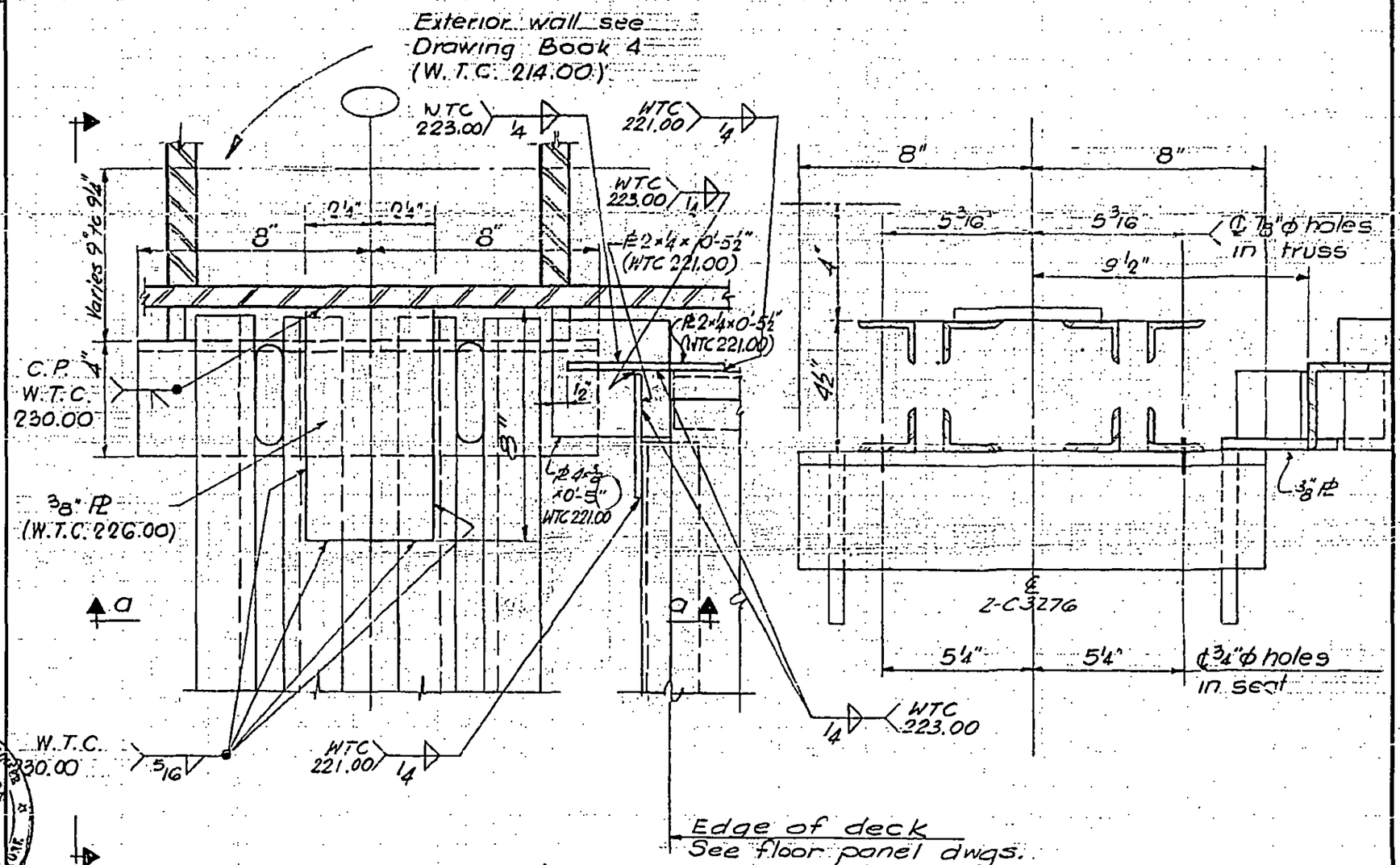

LICENSED PROFESSIONAL ENGINEER LESLIE E. ROBERTSON No. 34360 STATE OF NEW YORK

98

7-AB4-45

SKILLING, HELLE, CHRISTIANSEN, ROBERTSON — Structural & Civil Engineers

PROJECT: THE WORLD TRADE CENTER | TITLE: FLOOR PANEL - DETAIL E 65A | DATE: 11-25-68

REVISIONS

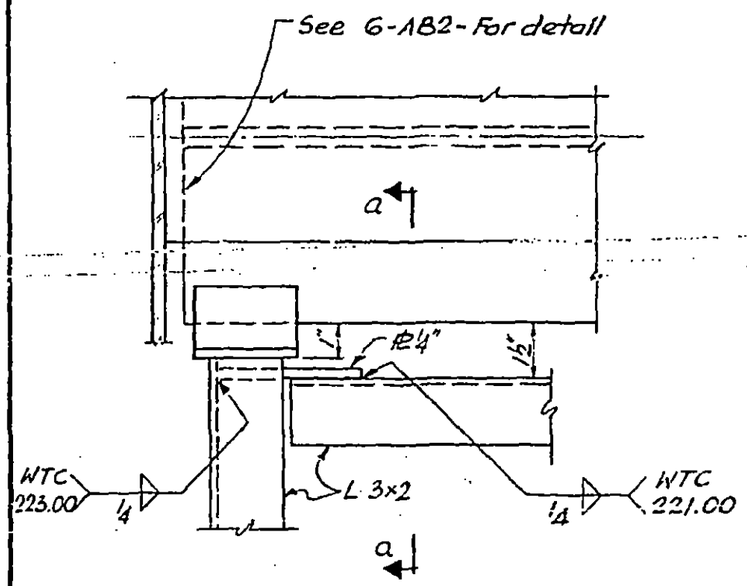

PLAN

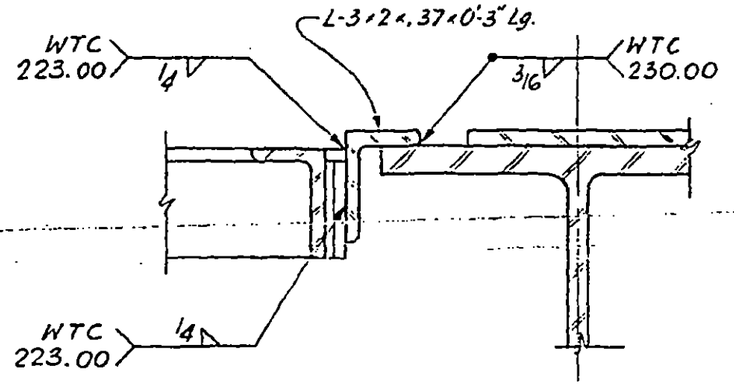

Section a-a

L 3×2 Deck Bms Top El. same as Top El. W-Bms

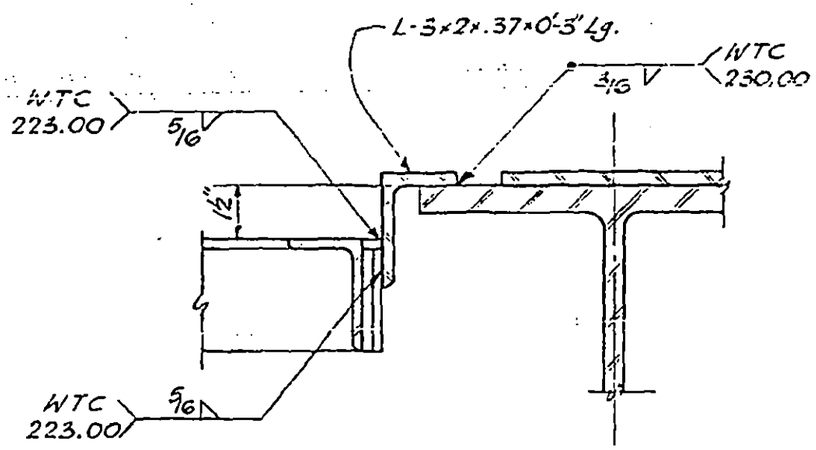

Section a-a

L 3×2 Deck Bms. Top El. below El. W-Bms.

LICENSED PROFESSIONAL ENGINEER
LESLIE E. ROBERTSON
No. 34360
UNIVERSITY OF THE STATE OF NEW YORK

DESIGNED

DRAWN

REVIEWED

7-AB4-A51

SKILLING - HELLE - CHRISTIANSEN - ROBERTSON Structural & Civil Engineers

PROJECT THE WORLD TRADE CENTER | TITLE FLOOR PANEL - DETAIL - E60 & E68 | DATE 1-3-68

REVISIONS

4-1-68
7-22-68
10-15-68

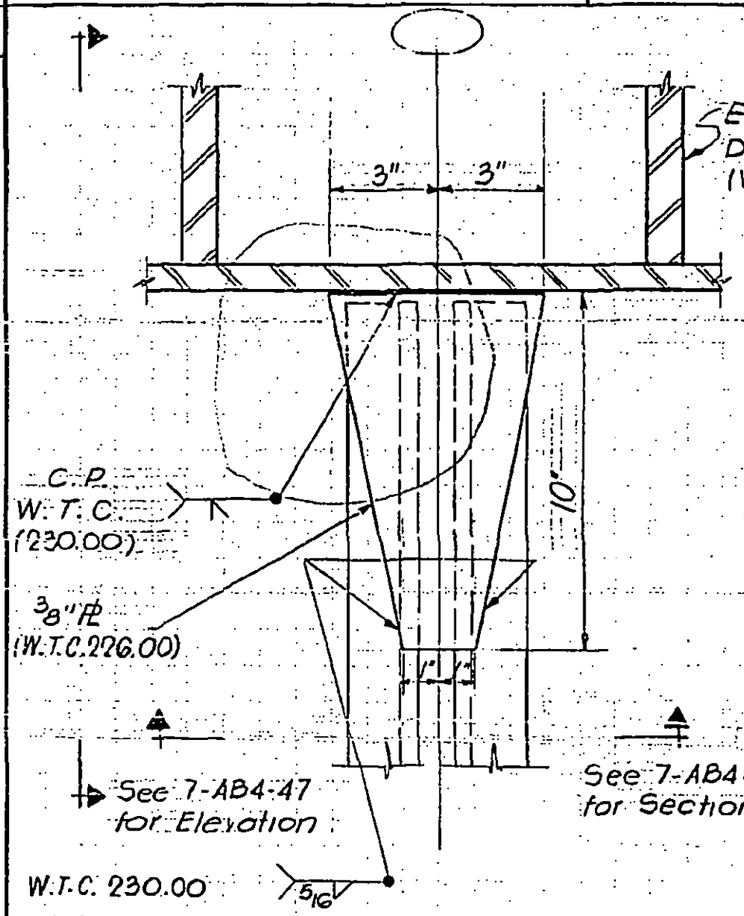

Detail E60

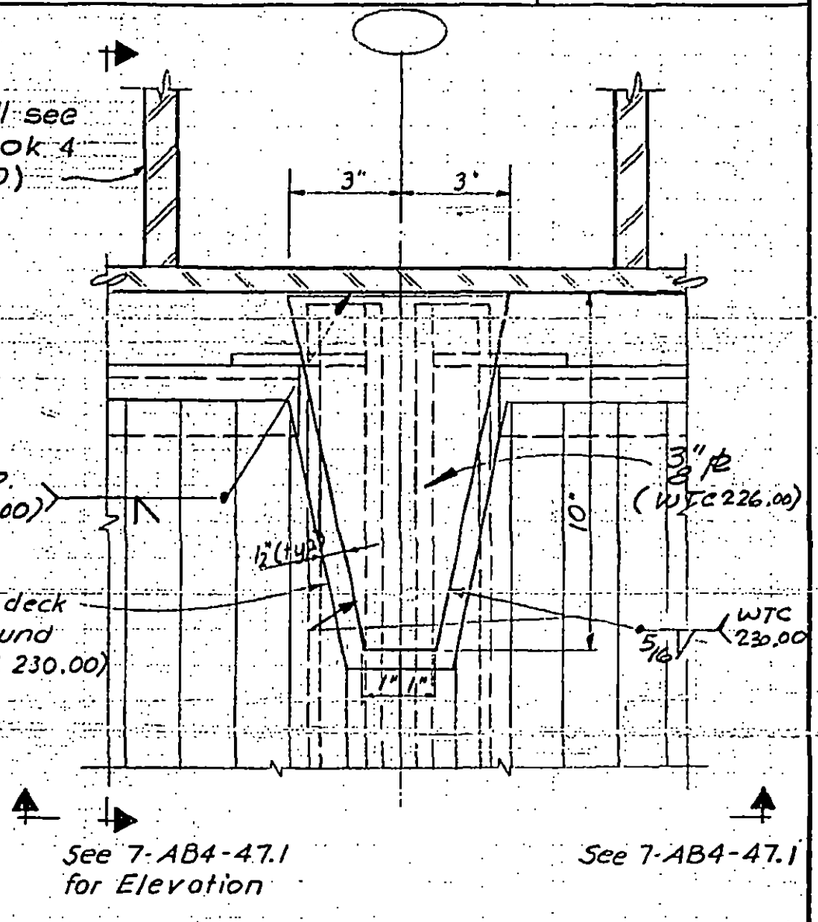

Detail E68

LICENSED PROFESSIONAL ENGINEER
LESLIE E. ROBERTSON
No. 34360
UNIVERSITY OF THE STATE OF NEW YORK

7-AB4-46

SKILLING, HELLE, CHRISTIANSEN, ROBERTSON — Structural & Civil Engineers

PROJECT THE WORLD TRADE CENTER | TITLE FLOOR PANEL - DETAIL E 68A | DATE 7-22-68

REVISIONS

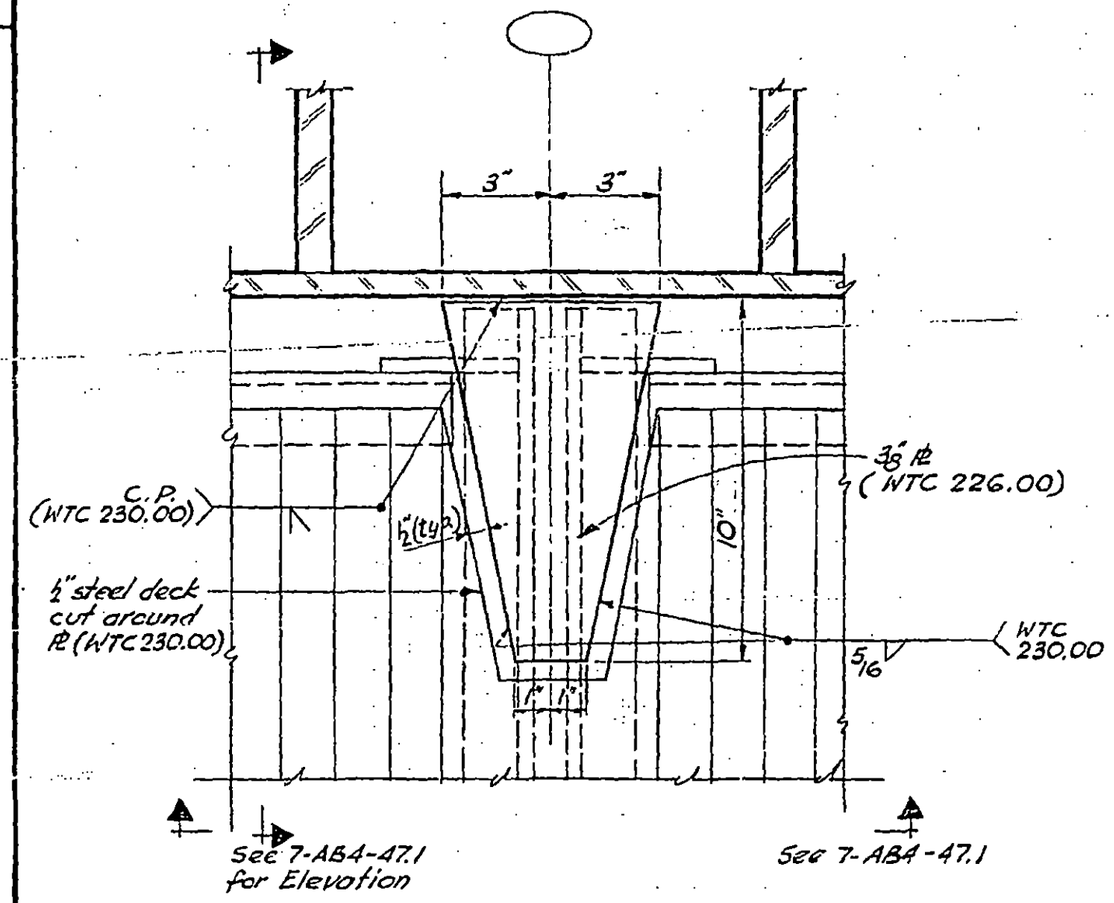

Detail E 68A

LICENSED PROFESSIONAL ENGINEER
LESLIE E. ROBERTSON
No. 34360
UNIVERSITY OF THE STATE OF NEW YORK

DESIGNED

DRAWN

REVIEWED

95

SKILLING - HELLE - CHRISTIANSEN - ROBERTSON Structural & Civil Engineers

PROJECT THE WORLD TRADE CENTER | TITLE DETAIL E60, E61, E62, E63, E64, E65, E66, E67 | DATE 10-20-67

REVISIONS

1-3-68
4-1-68
7-22-68

For plan see:
7-AB4-44 E61 - E64, E66 & E67
7-AB4-45 E65
7-AB4-46 E60

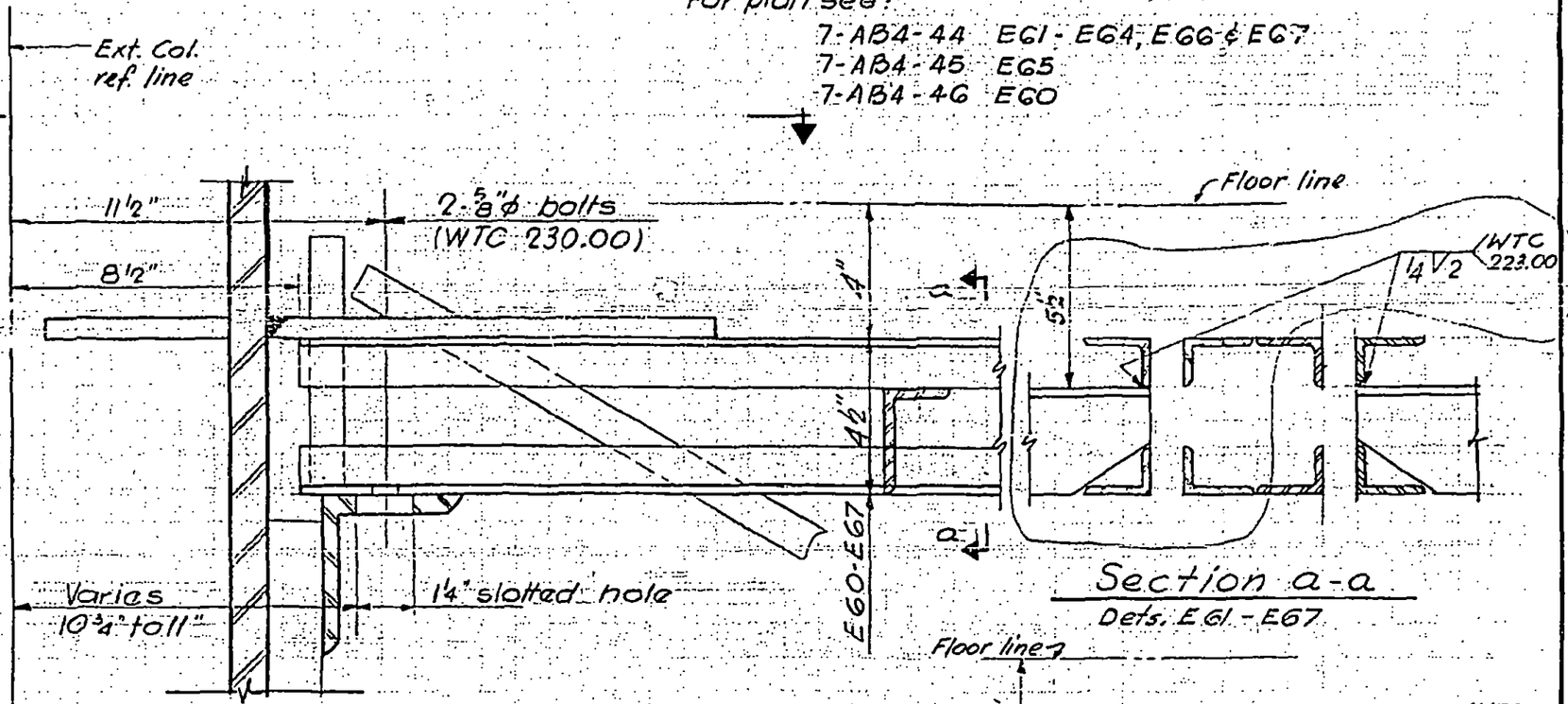

Section a-a
Dets. E61 - E67

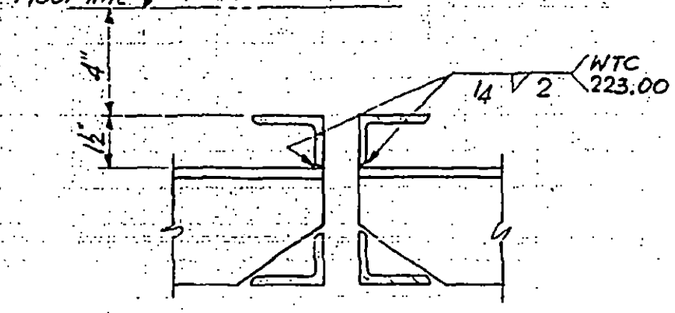

Section a-a
Detail E60 only

LICENSED PROFESSIONAL ENGINEER
LESLIE E. ROBERTSON
No. 34360
UNIVERSITY OF THE STATE OF NEW YORK

7-AB4-47

SKILLING - HELLE - CHRISTIANSEN - ROBERTSON Structural & Civil Engineers

PROJECT THE WORLD TRADE CENTER | TITLE DETAIL E68 & E68A | DATE 4-1-68

REVISIONS

7-22-68
10-15-68

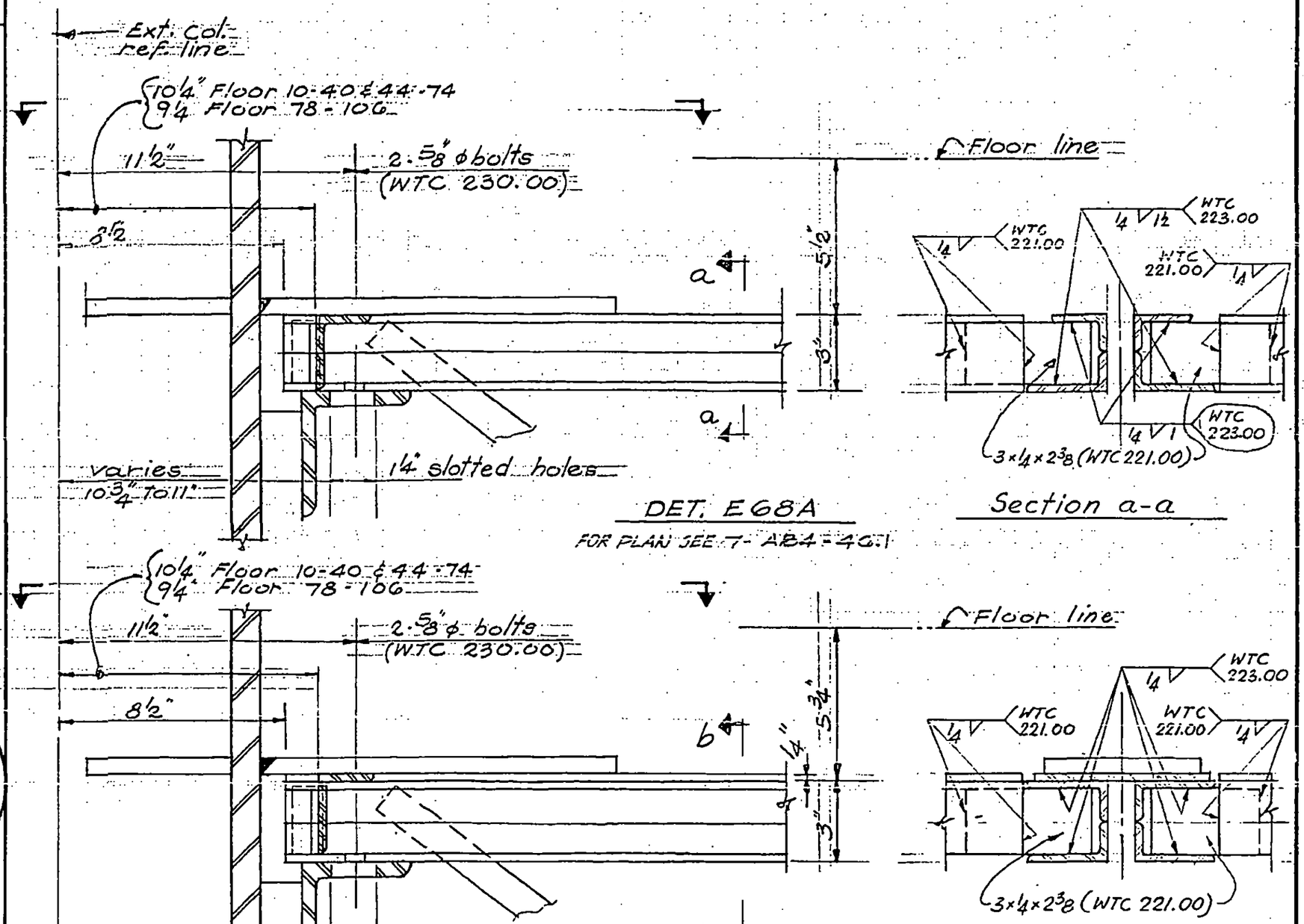

LICENSED PROFESSIONAL ENGINEER
LESLIE E. ROBERTSON
No. 34360
UNIVERSITY OF THE STATE OF NEW YORK

7-AB4-47.1

97

SKILLING - HELLE - CHRISTIANSEN - ROBERTSON Structural & Civil Engineers

PROJECT THE WORLD TRADE CENTER | TITLE DETAIL EG1, EG2, EG3 & EG4 | DATE 10-20-67

REVISIONS

1-3-68

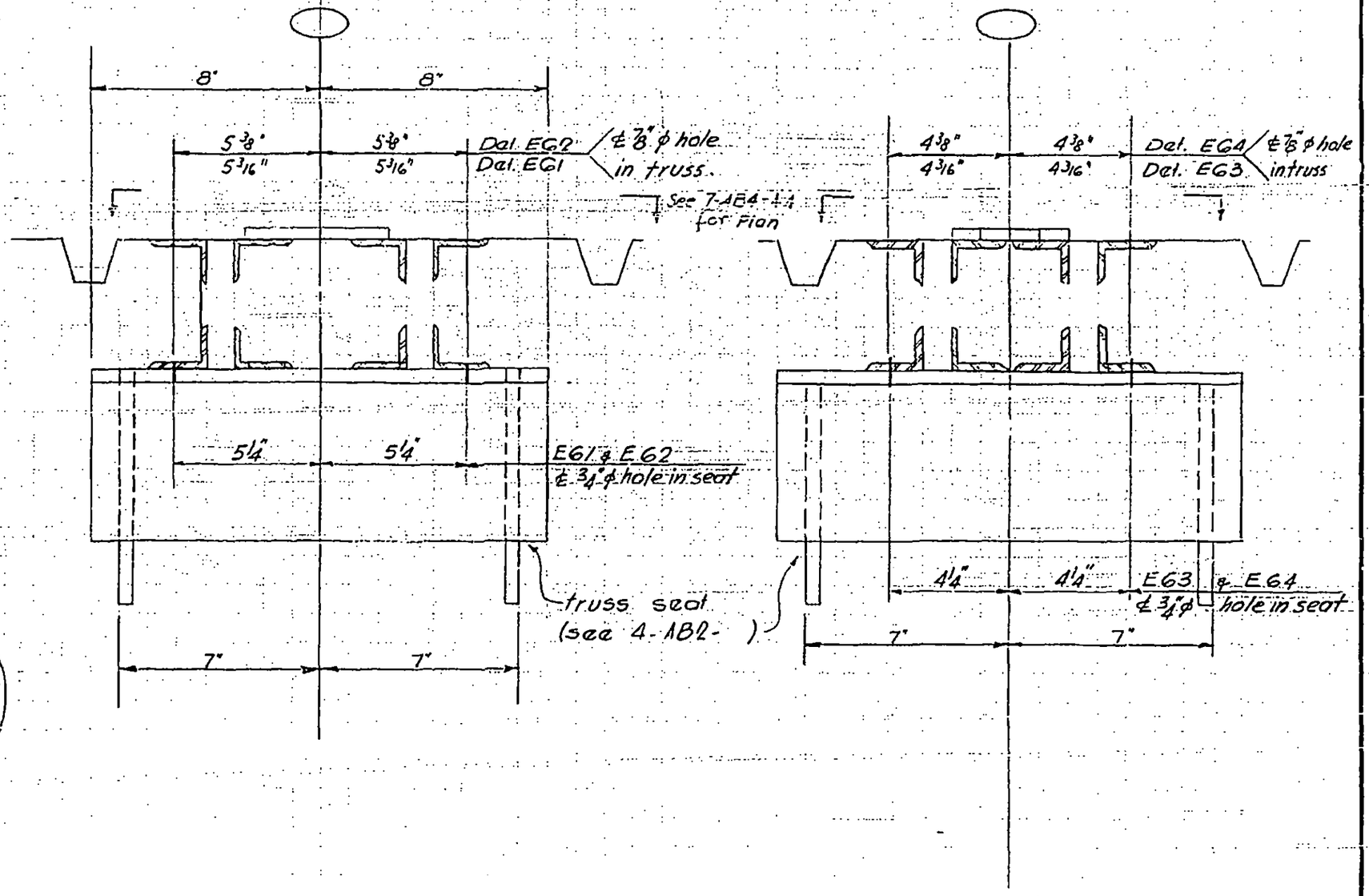

LICENSED PROFESSIONAL ENGINEER
LESLIE E. ROBERTSON
No. 34360
UNIVERSITY OF THE STATE OF NEW YORK

101

7-AB4-48

SKILLING - HELLE - CHRISTIANSEN - ROBERTSON Structural & Civil Engineers

PROJECT THE WORLD TRADE CENTER | TITLE FLOOR PANEL - DETAIL EG0, EG6, EG7 | DATE 10-20-67

REVISIONS

1-3-68
4-1-68
7-22-68

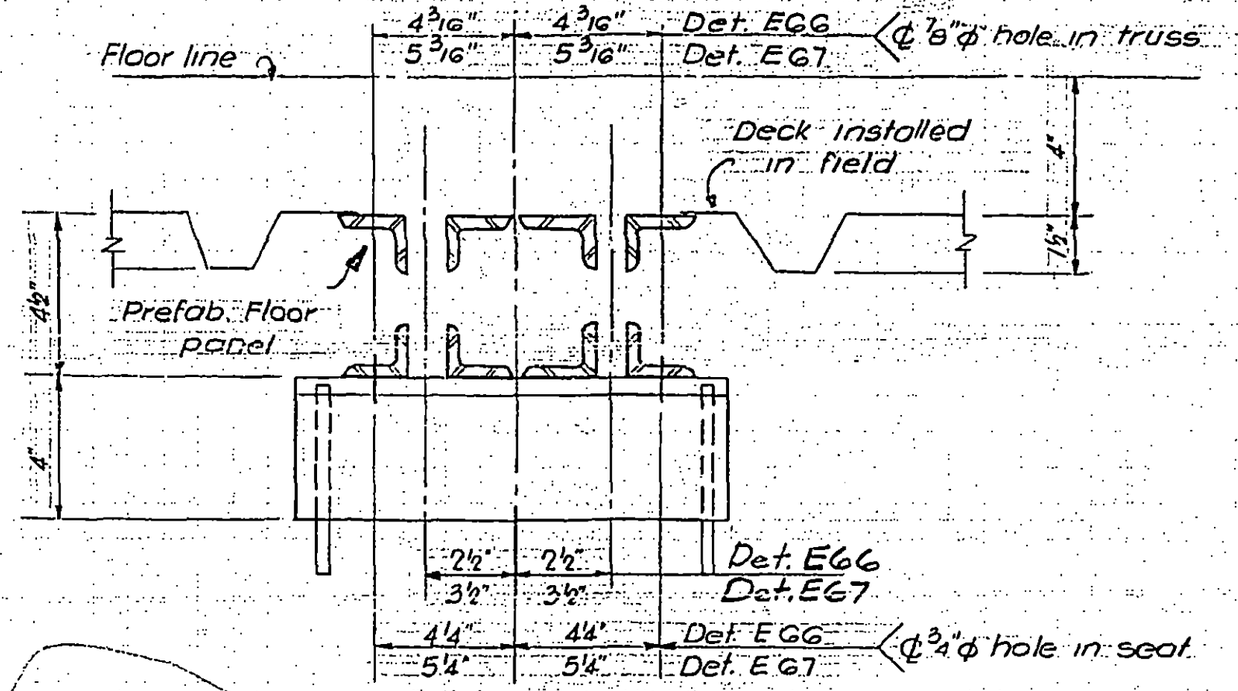

Detail EG6 & EG7

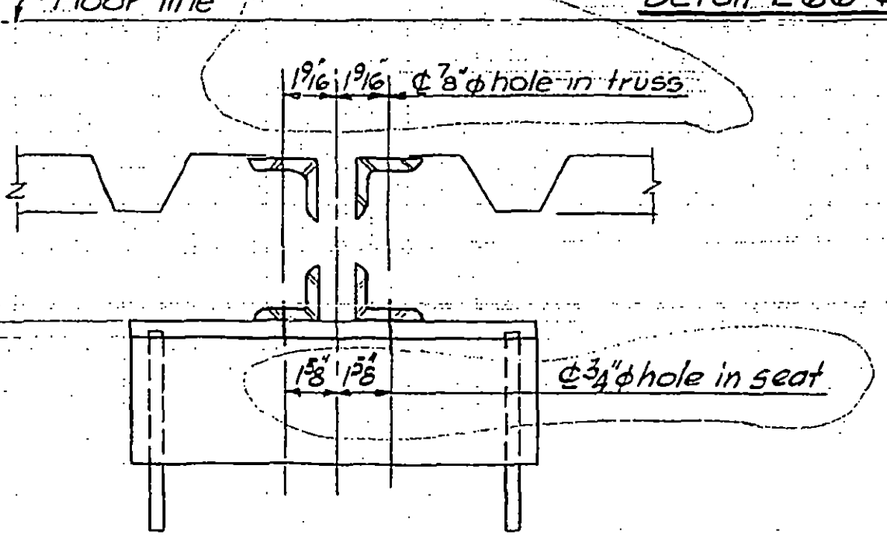

Detail EG0

LICENSED PROFESSIONAL ENGINEER
LESLIE E. ROBERTSON
No. 34360
UNIVERSITY OF THE STATE OF NEW YORK

7-AB4-49

SKILLING, HELLE, CHRISTIANSEN, ROBERTSON — Structural & Civil Engineers

PROJECT THE WORLD TRADE CENTER | TITLE FLOOR PANEL – DETAIL E68 & E68A | DATE 7-22-68

REVISIONS

10-15-68

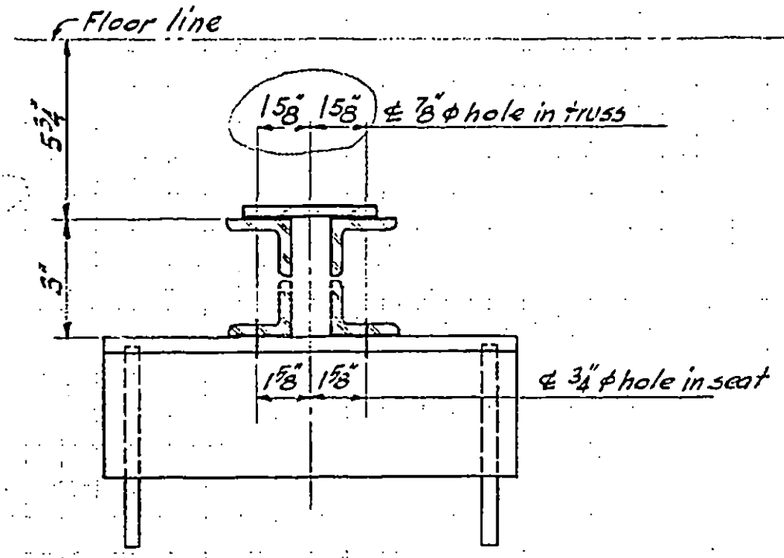

Detail E 68

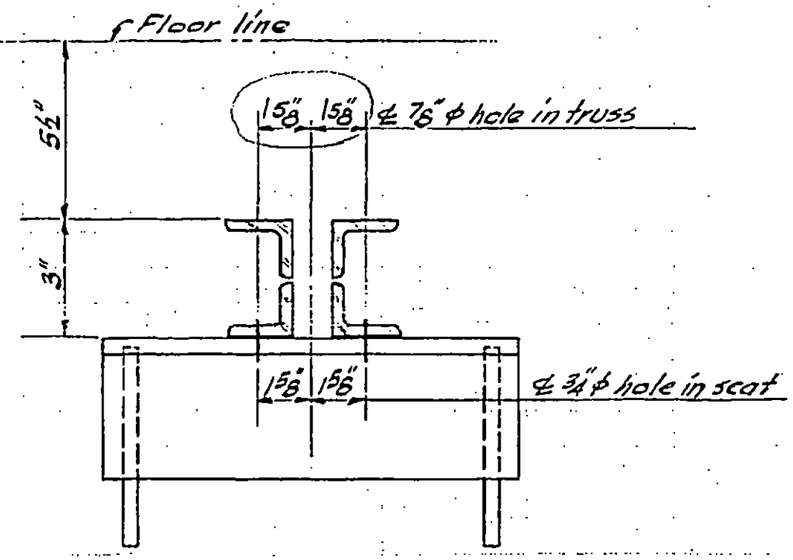

Detail E 68A

LICENSED PROFESSIONAL ENGINEER
LESLIE E. ROBERTSON
No. 34360
UNIVERSITY OF THE STATE OF NEW YORK

DESIGNED

DRAWN

REVIEWED

99

7-AB4-49.1

SKILLING, HELLE, CHRISTIANSEN, ROBERTSON — Structural & Civil Engineers

PROJECT THE WORLD TRADE CENTER | TITLE FLOOR PANEL - DETAIL E 69 | DATE 8-15-68

REVISIONS

10-4-68

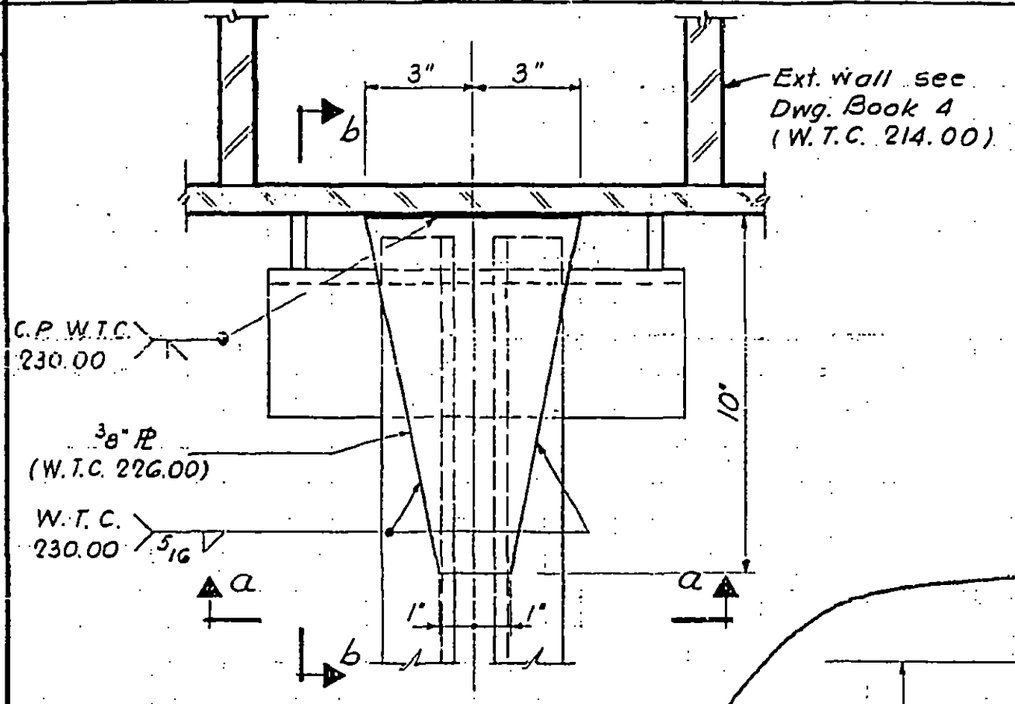

Plan

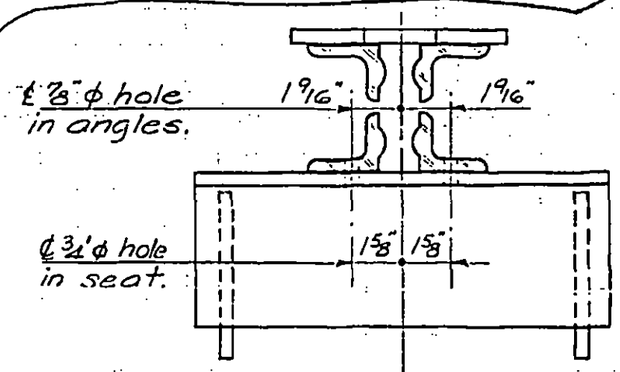

Section a-a

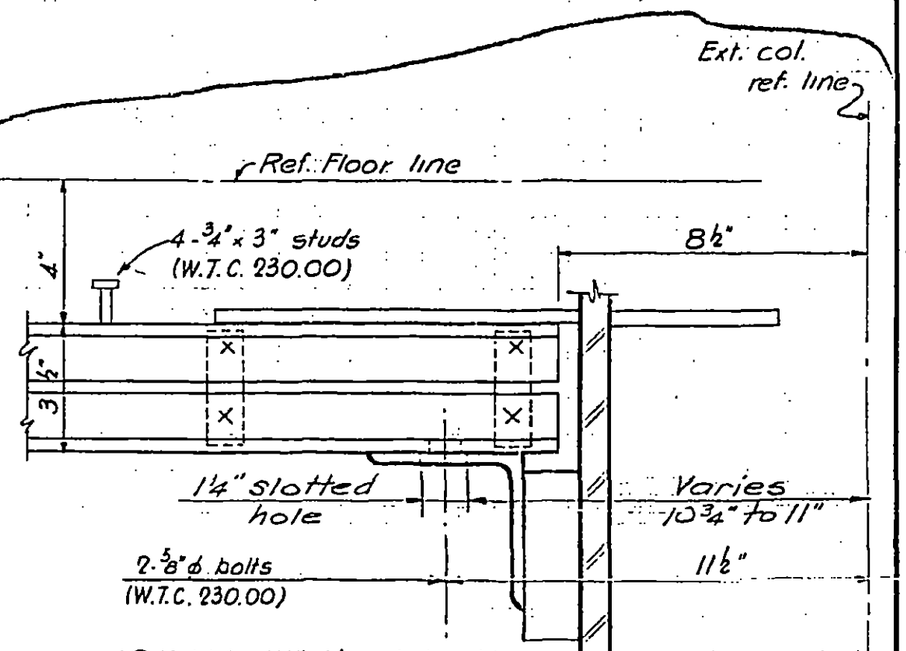

Section b-b

LICENSED PROFESSIONAL ENGINEER — LESLIE E. ROBERTSON — No. 34360 — UNIVERSITY OF THE STATE OF NEW YORK

DESIGNED

DRAWN

REVIEWED

7-AB4-49.2

SKILLING, HELLE, CHRISTIANSEN, ROBERTSON — Structural & Civil Engineers

PROJECT THE WORLD TRADE CENTER | TITLE DETAIL E70, E71, E72, E73 | DATE 8-1-68

REVISIONS

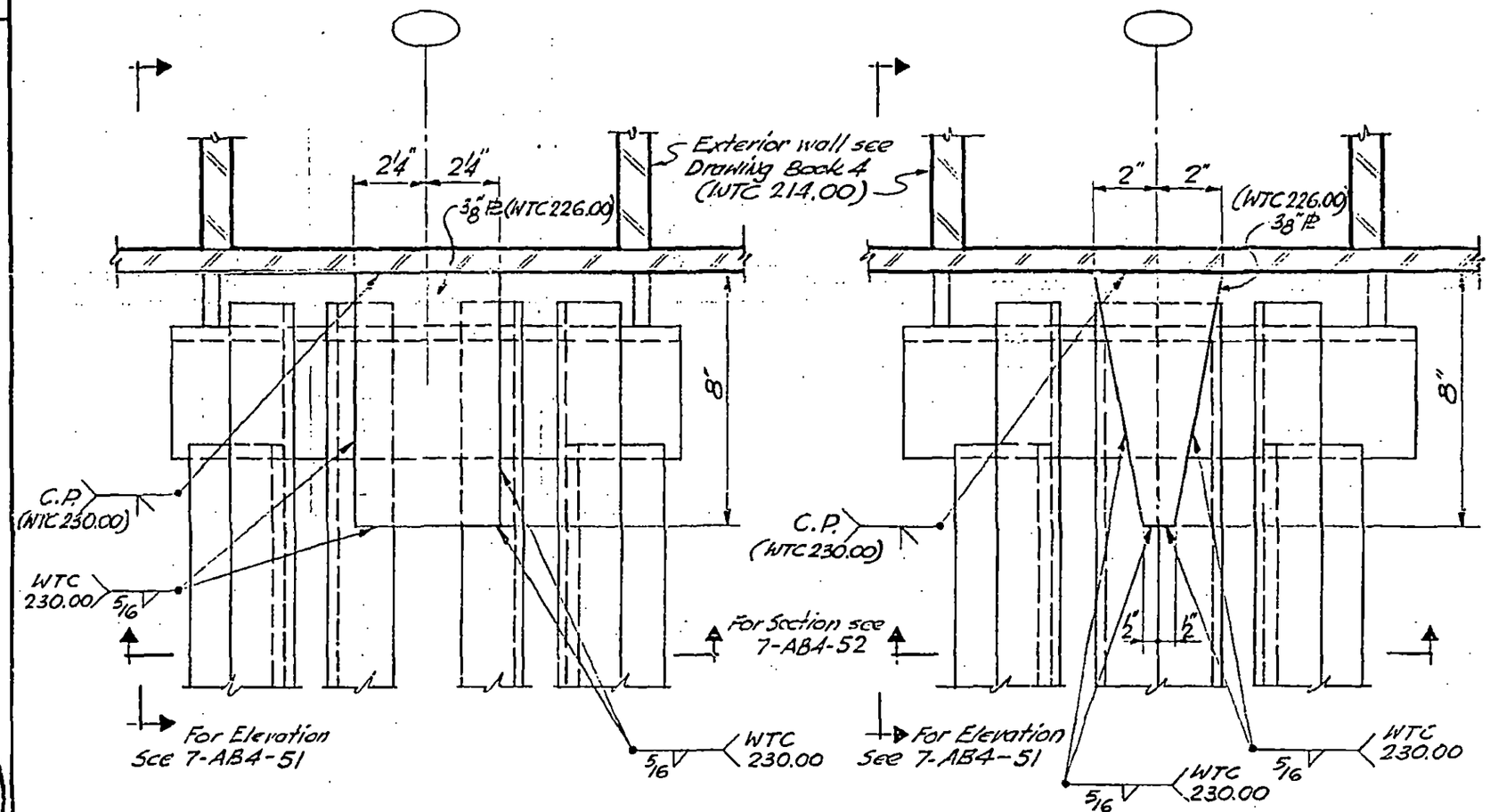

E70 & E71

E72 & E73

DESIGNED

DRAWN

REVIEWED

7-AB4-50

SKILLING, HELLE, CHRISTIANSEN, ROBERTSON — Structural & Civil Engineers

PROJECT THE WORLD TRADE CENTER | TITLE DETAIL E70, E71, E72, E73 | DATE 8-1-68

REVISIONS

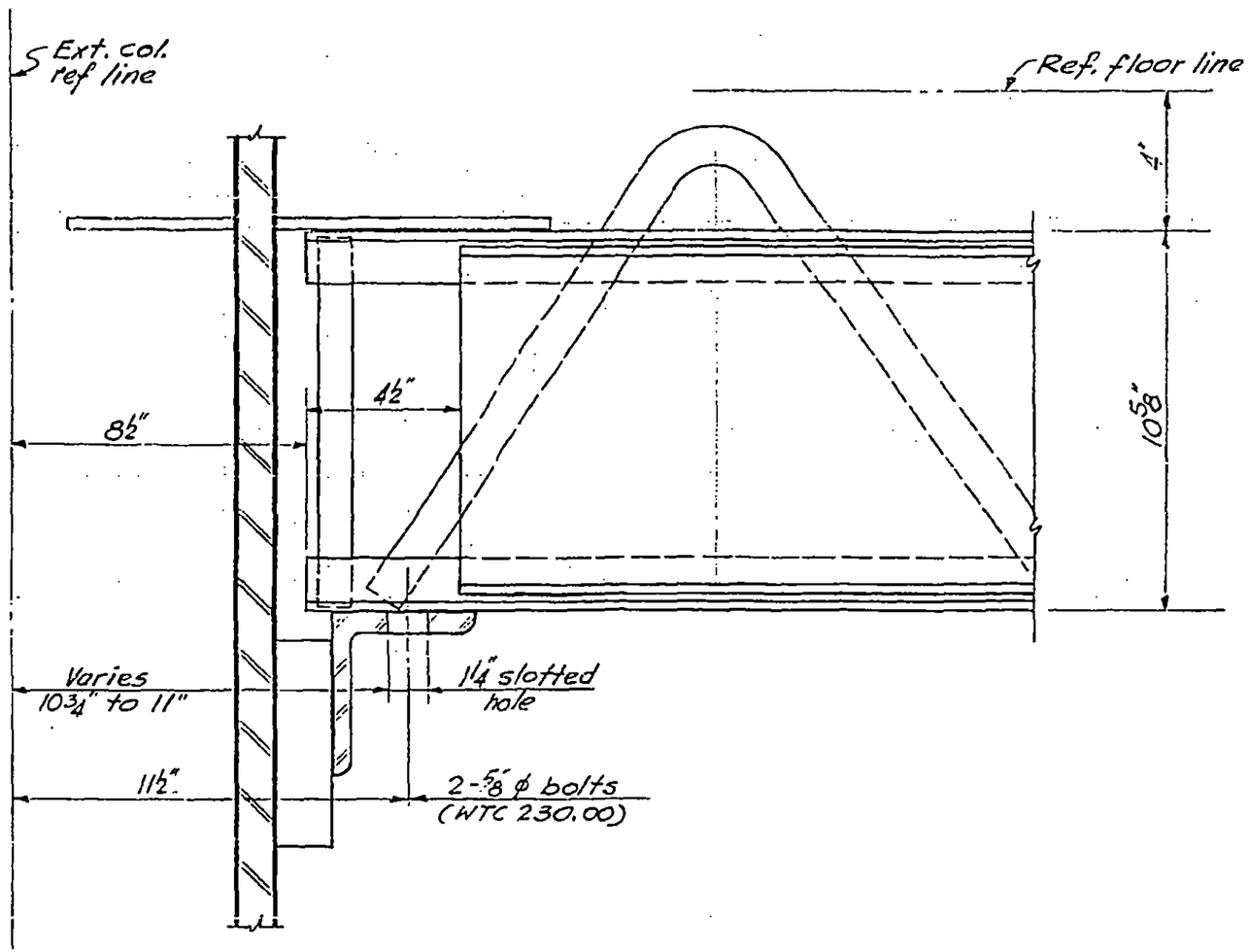

DESIGNED

DRAWN

REVIEWED

7-AB4-51

SKILLING, HELLE, CHRISTIANSEN, ROBERTSON — Structural & Civil Engineers

PROJECT THE WORLD TRADE CENTER | TITLE DETAIL E 70, E 71, E 72, E 73 | DATE 8-1-68

REVISIONS

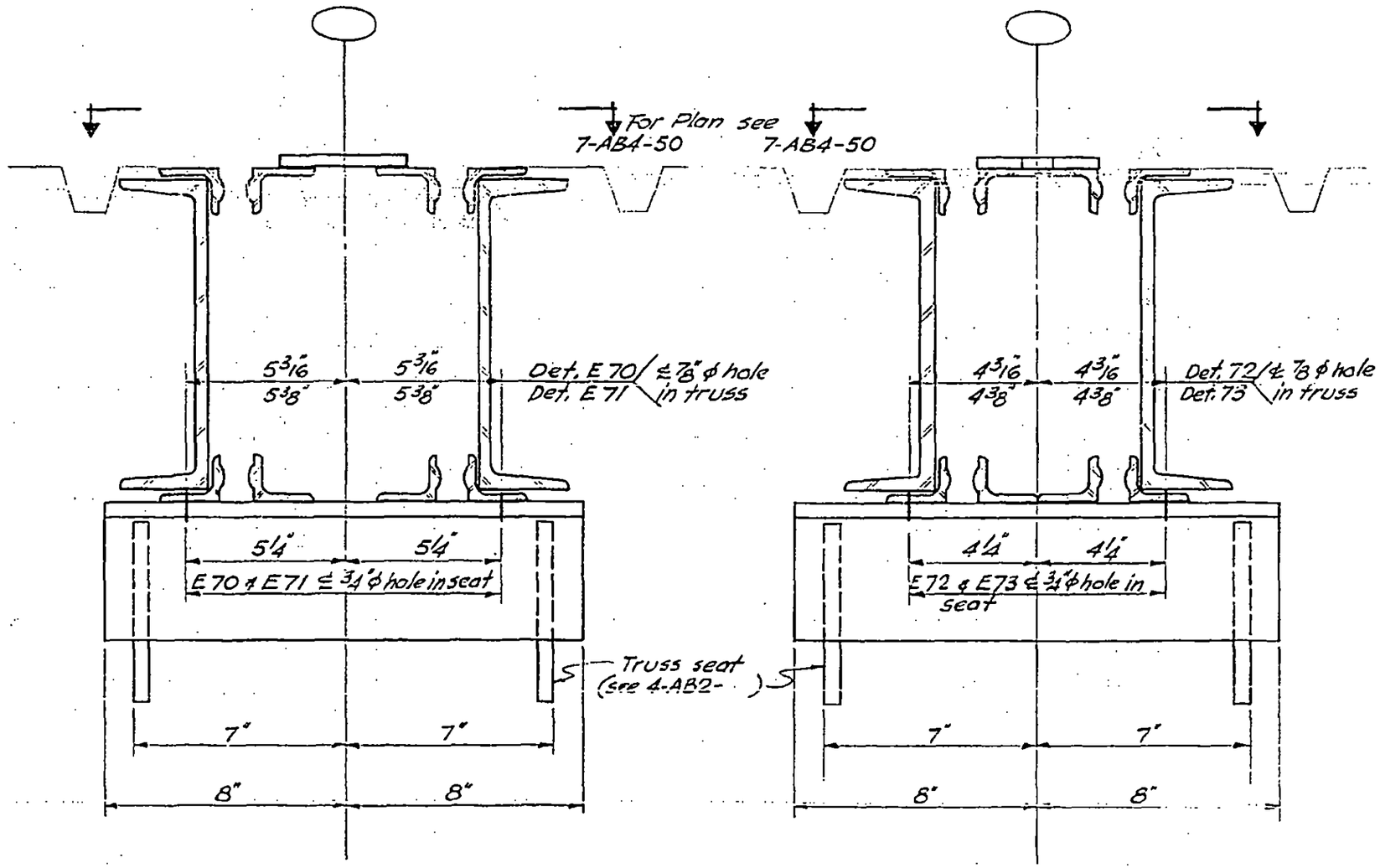

E 70
E 71

E 72
E 73

DESIGNED

DRAWN

REVIEWED

7-AB4-52

SKILLING, HELLE, CHRISTIANSEN, ROBERTSON — Structural & Civil Engineers

PROJECT: THE WORLD TRADE CENTER | TITLE: FLOOR PANEL - DETAIL E 74 | DATE: 8-15-68

REVISIONS

10-4-68

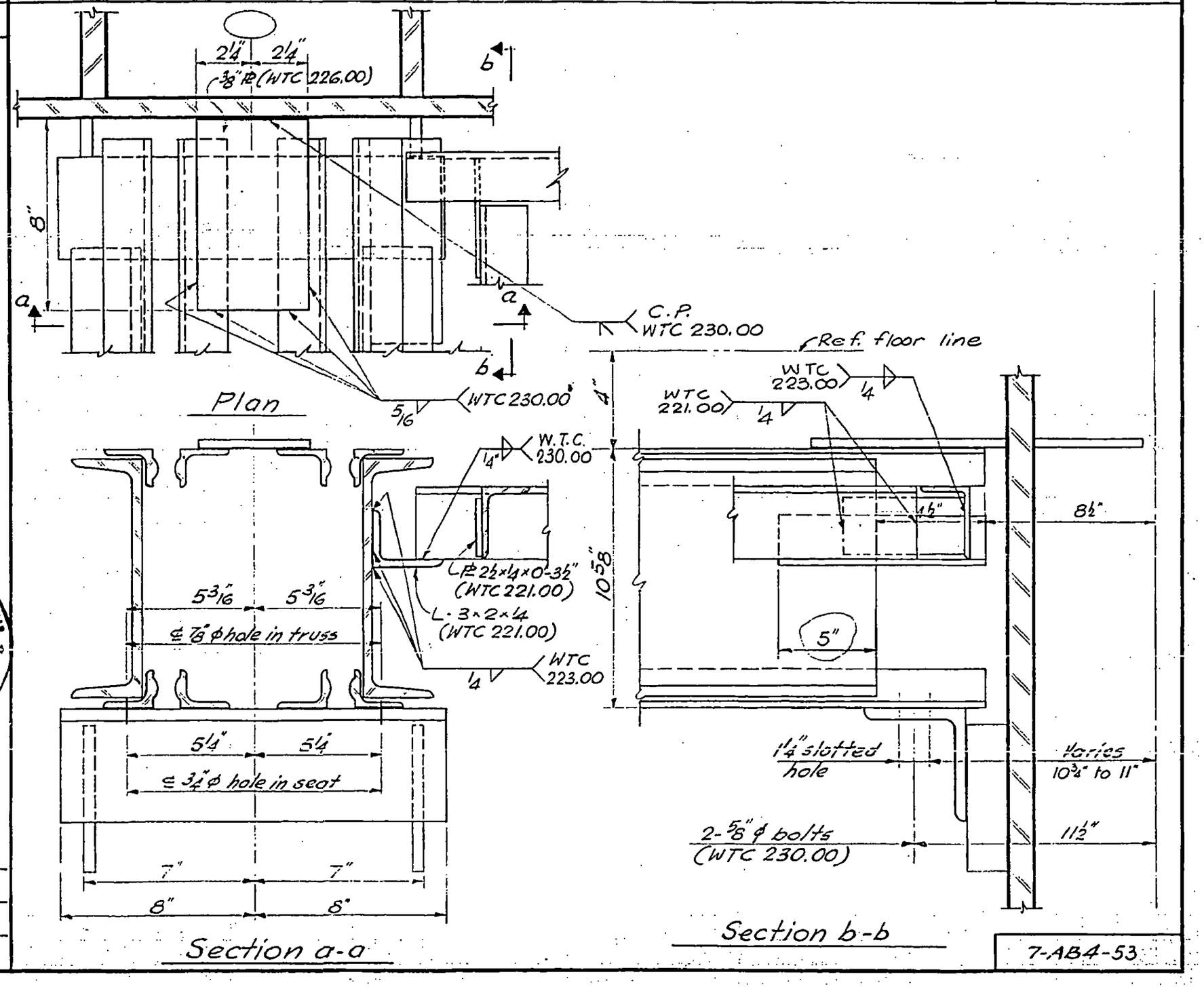

Section a-a

Section b-b

7-AB4-53

LICENSED PROFESSIONAL ENGINEER
LESLIE E. ROBERTSON
No. 34360
UNIVERSITY OF THE STATE OF NEW YORK

DESIGNED

DRAWN

REVIEWED

SKILLING, HELLE, CHRISTIANSEN, ROBERTSON — Structural & Civil Engineers

PROJECT: THE WORLD TRADE CENTER | TITLE: FLOOR PANEL - DETAIL E 75 | DATE: 8-15-68

REVISIONS

10-4-68

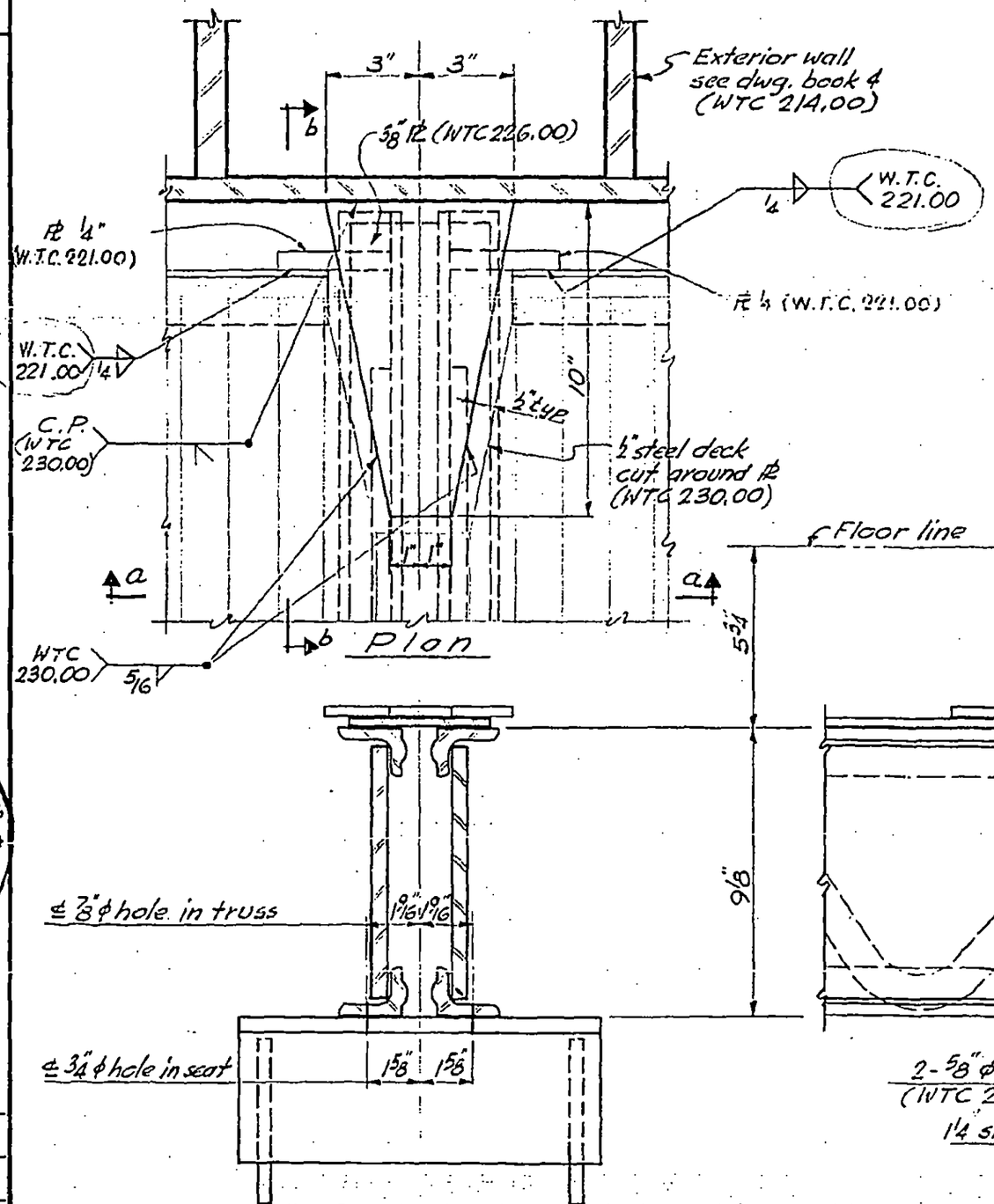

Section a-a

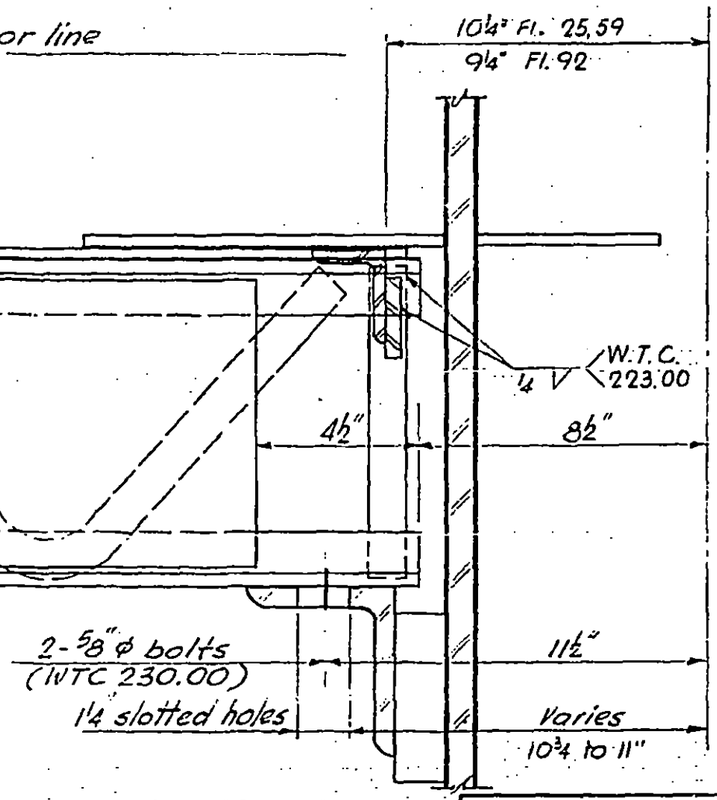

Section b-b

7-AB4-54

LICENSED PROFESSIONAL ENGINEER — LESLIE E. ROBERTSON — No. 34360 — UNIVERSITY OF THE STATE OF NEW YORK

DESIGNED

DRAWN

REVIEWED

SKILLING, HELLE, CHRISTIANSEN, ROBERTSON — Structural & Civil Engineers

PROJECT: THE WORLD TRADE CENTER | TITLE: FLOOR PANEL - DETAIL E 75A | DATE: 8-15-68

REVISIONS

10-4-68

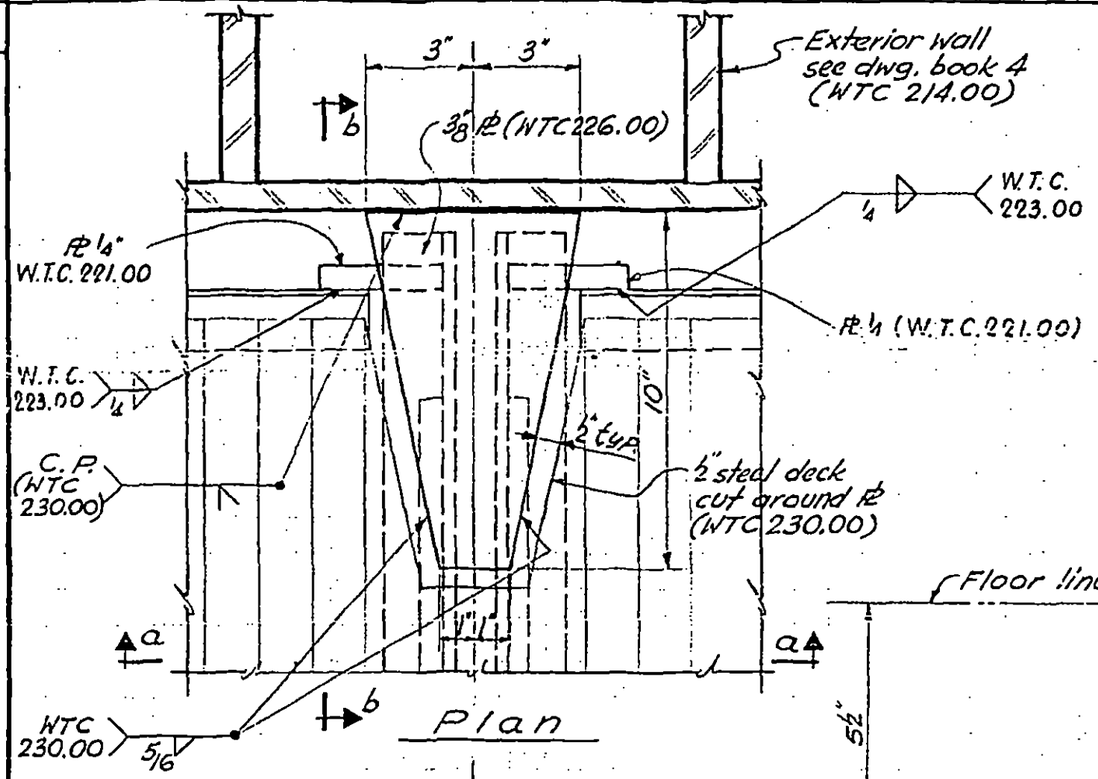

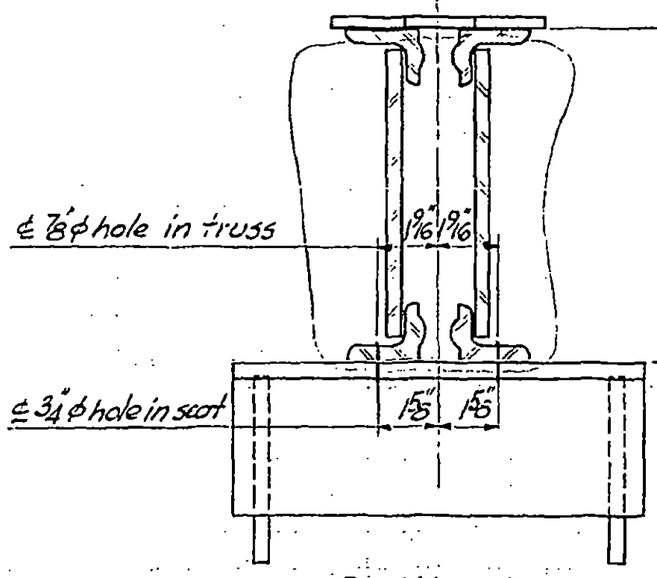

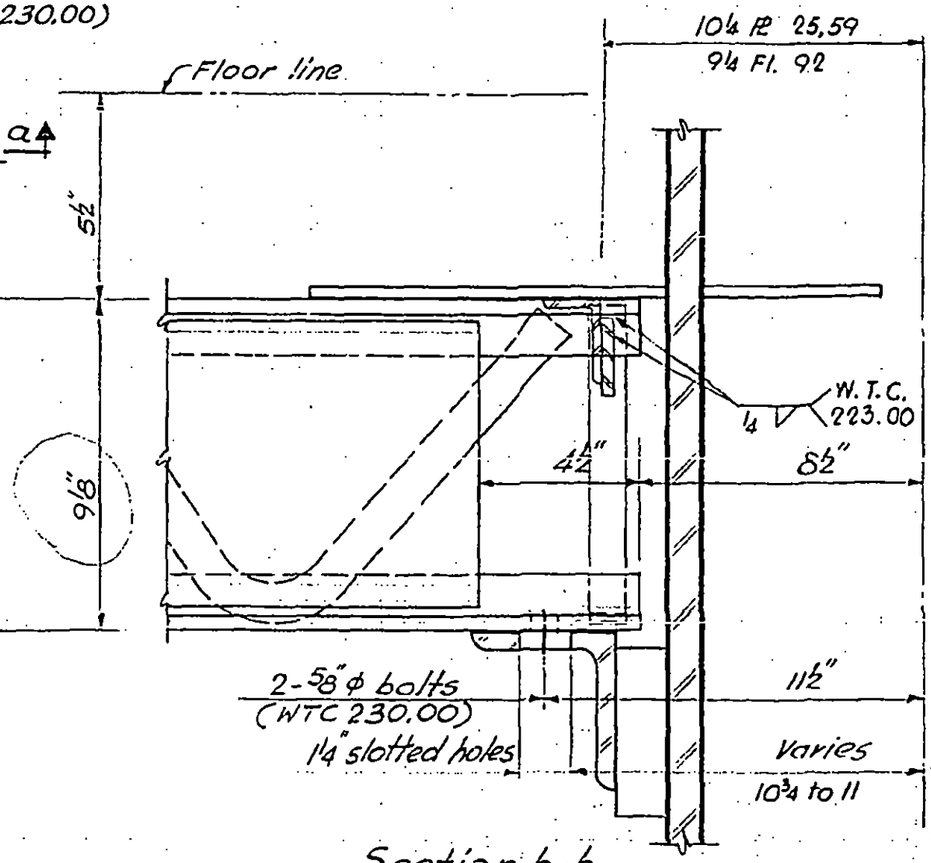

LICENSED PROFESSIONAL ENGINEER
LESLIE E. ROBERTSON
No. 34360
UNIVERSITY OF THE STATE OF NEW YORK

DESIGNED

DRAWN

REVIEWED

7-AB4-55

SKILLING, HELLE, CHRISTIANSEN, ROBERTSON — Structural & Civil Engineers

PROJECT	TITLE	DATE
THE WORLD TRADE CENTER	FLOOR PANEL - DETAIL E 76	8.15.68

REVISIONS

10-4-68

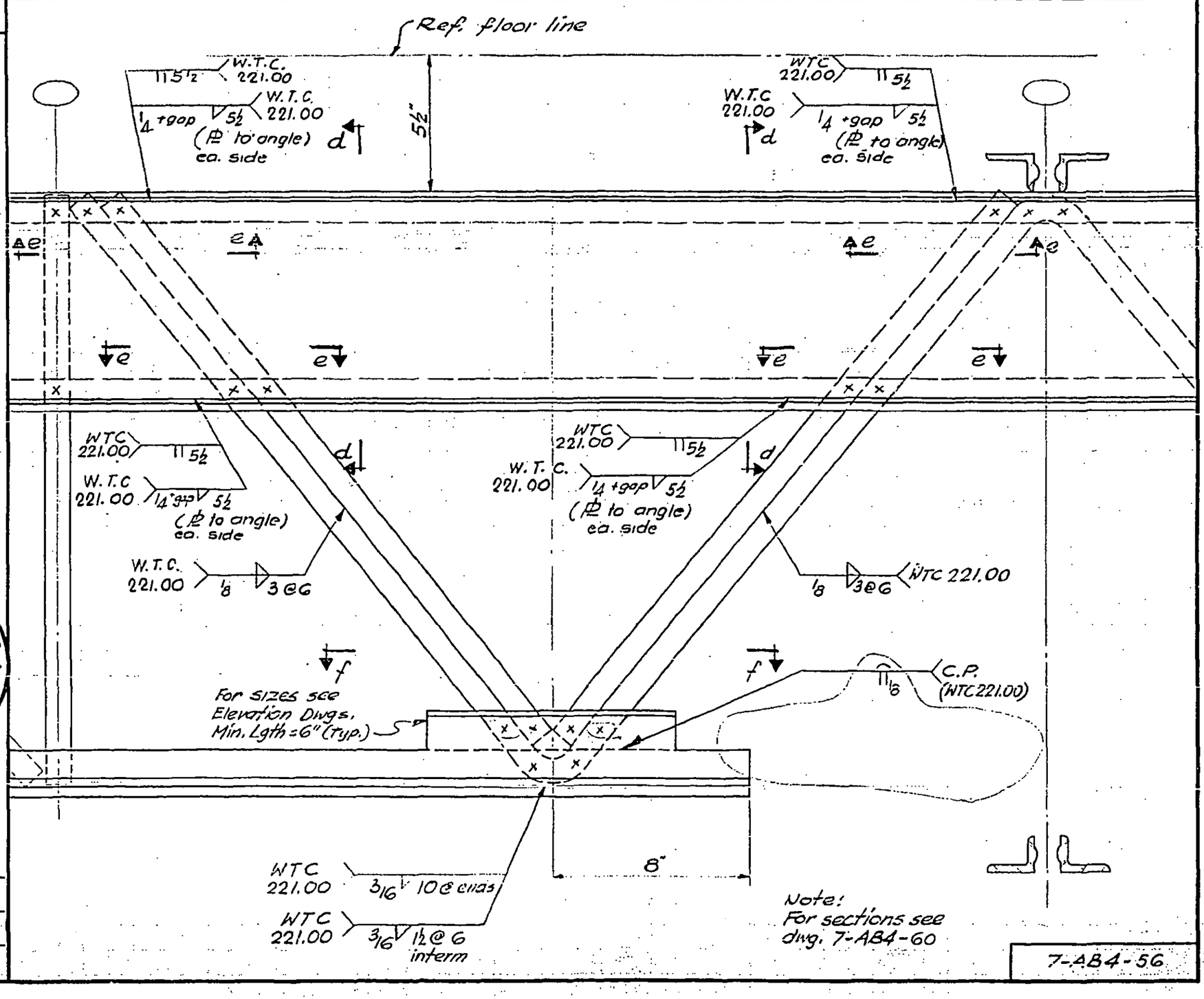

LICENSED PROFESSIONAL ENGINEER
LESLIE E. ROBERTSON
No. 34360
UNIVERSITY OF THE STATE OF NEW YORK

DESIGNED

DRAWN

REVIEWED

7-AB4-56

SKILLING, HELLE, CHRISTIANSEN, ROBERTSON — Structural & Civil Engineers

PROJECT THE WORLD TRADE CENTER | TITLE FLOOR PANEL - DETAIL E 76 | DATE 8 - 15 - 68

REVISIONS

10-4-68

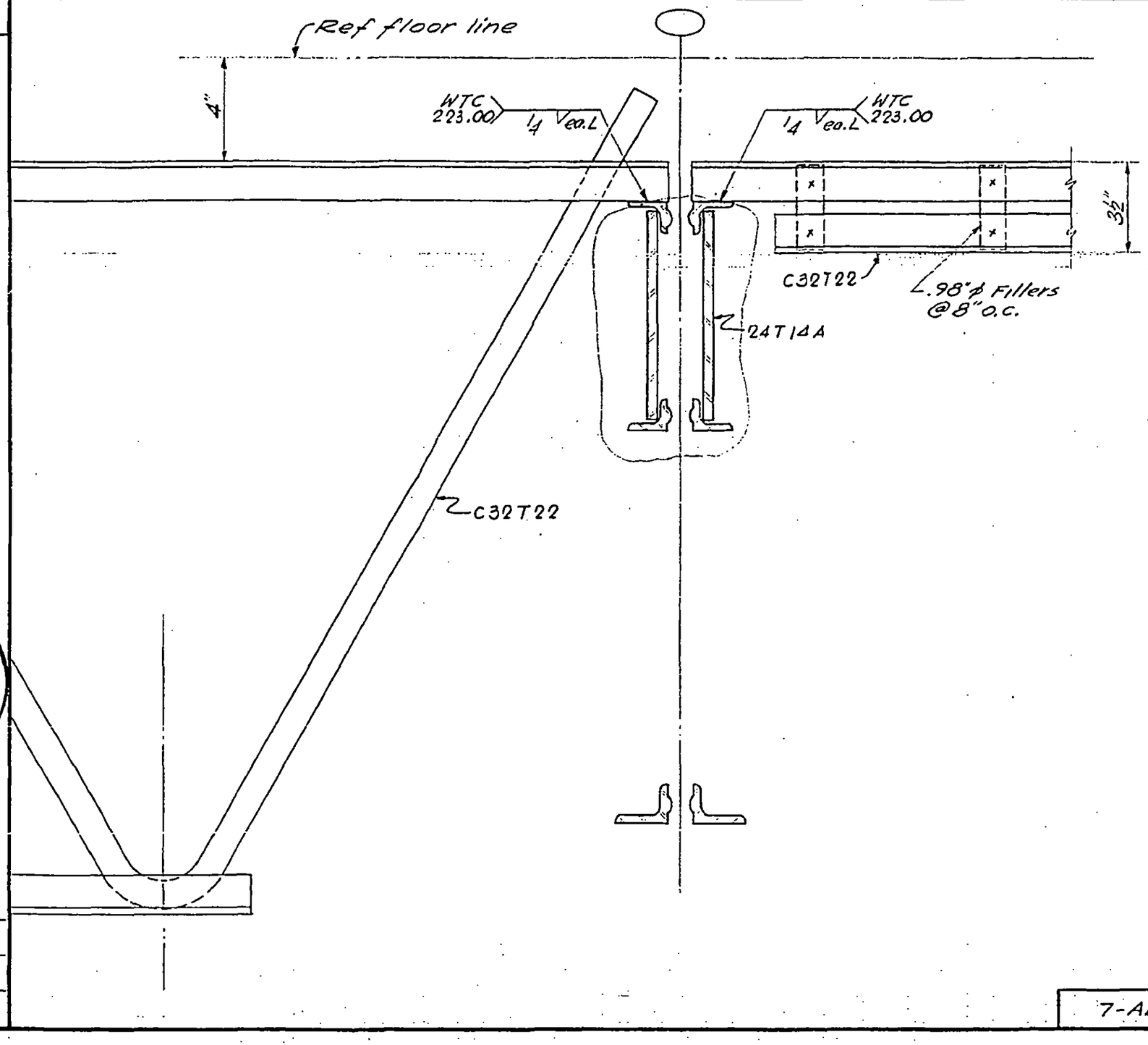

LICENSED PROFESSIONAL ENGINEER
LESLIE E. ROBERTSON
No. 34360
UNIVERSITY OF THE STATE OF NEW YORK

DESIGNED

DRAWN

REVIEWED

7-AB4-57

SKILLING, HELLE, CHRISTIANSEN, ROBERTSON — Structural & Civil Engineers

PROJECT: THE WORLD TRADE CENTER | TITLE: FLOOR PANEL - DETAIL E TG A, E TG B | DATE: 8-15-68

REVISIONS

10-4-68

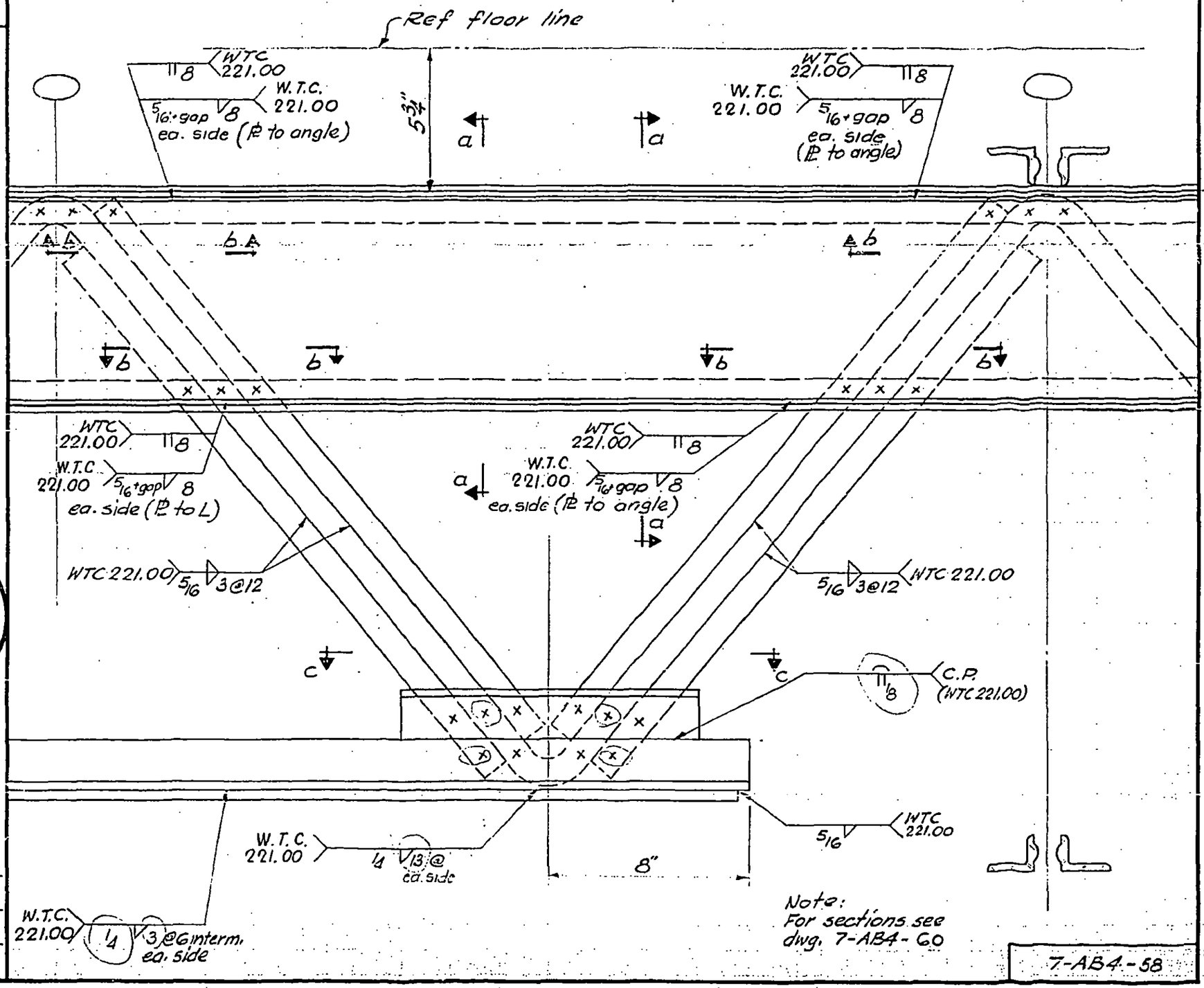

Note:
For sections see dwg. 7-AB4-60

7-AB4-58

LICENSED PROFESSIONAL ENGINEER
LESLIE E. ROBERTSON
No. 34360
UNIVERSITY OF THE STATE OF NEW YORK

DESIGNED

DRAWN

REVIEWED

SKILLING, HELLE, CHRISTIANSEN, ROBERTSON — Structural & Civil Engineers

PROJECT THE WORLD TRADE CENTER | TITLE DETAIL E 76A, E 76B, E77 | DATE 8-15-68

REVISIONS

10-4-68

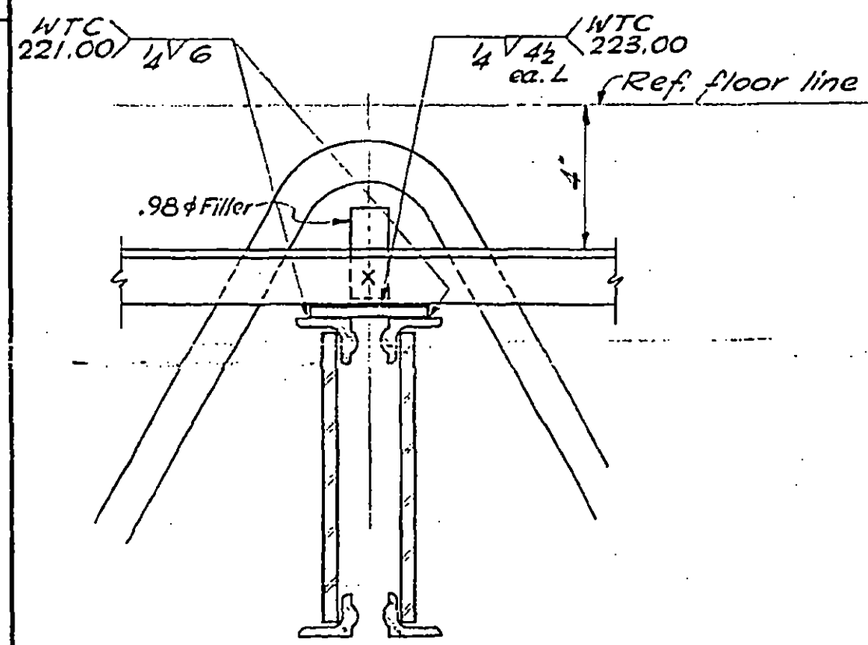

E 76A

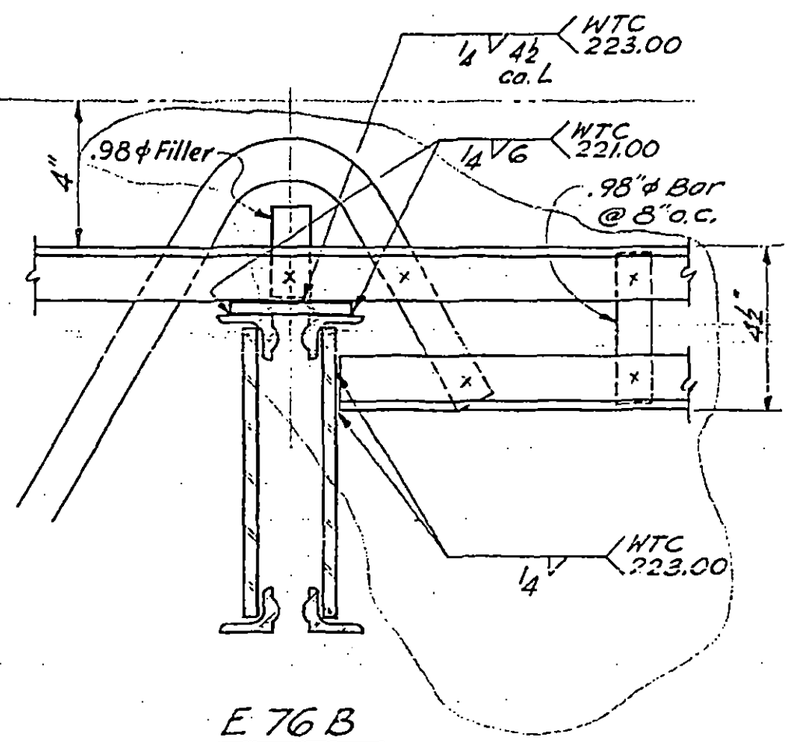

E 76B

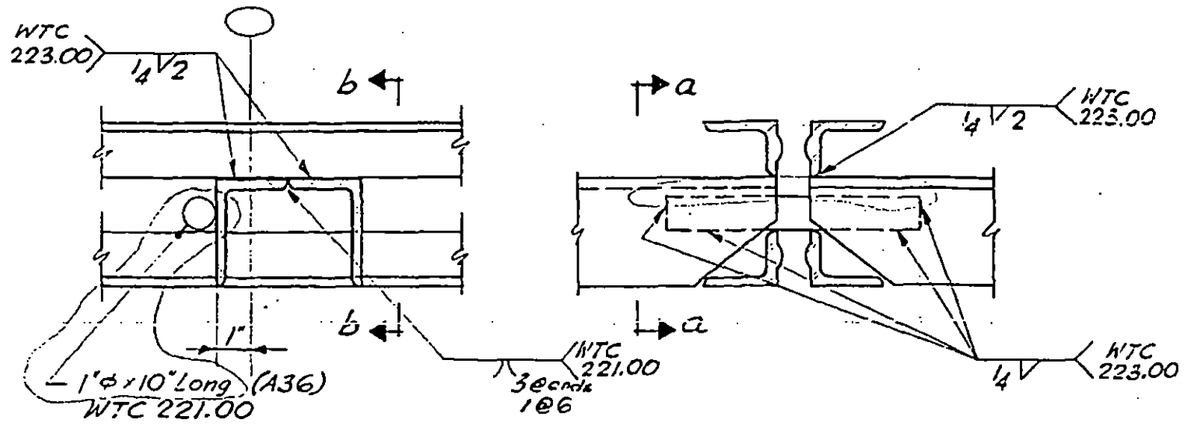

Section a-a — Section b-b

Detail E77

For plan see Det. E42 (7-AB4-23)

7-AB4-59

DESIGNED

DRAWN

REVIEWED

LICENSED PROFESSIONAL ENGINEER — LESLIE E. ROBERTSON — No. 34360 — UNIVERSITY OF THE STATE OF NEW YORK

SKILLING, HELLE, CHRISTIANSEN, ROBERTSON — Structural & Civil Engineers

PROJECT: THE WORLD TRADE CENTER | TITLE: FLOOR PANEL – DETAIL E 7G, E 7GA, E 7GB | DATE: 8-15-68

REVISIONS

10-4-68
7-28-70

Note A: Add arc welding as reqd. to develop full strength of web bars.

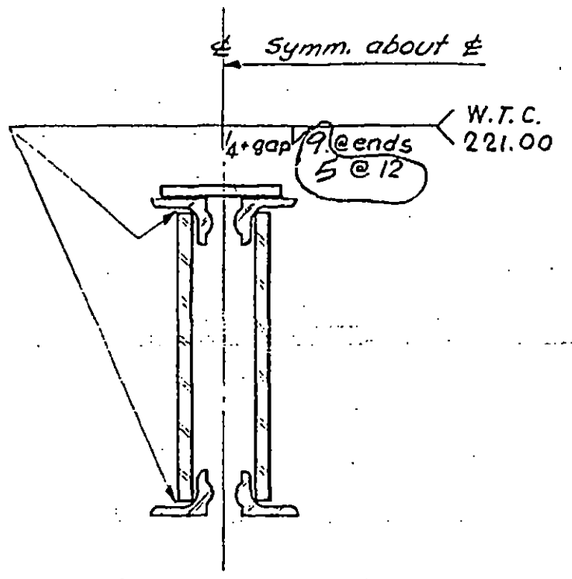

Section a-a

Note B: For additional J to L welding see detail E 7G - E 7GB

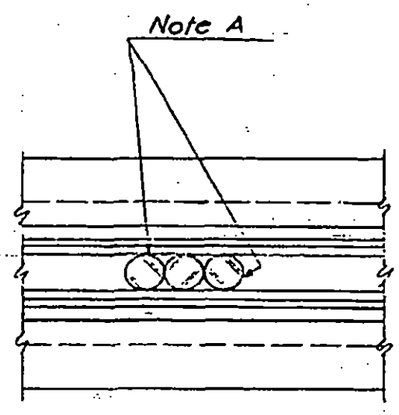

Section b-b

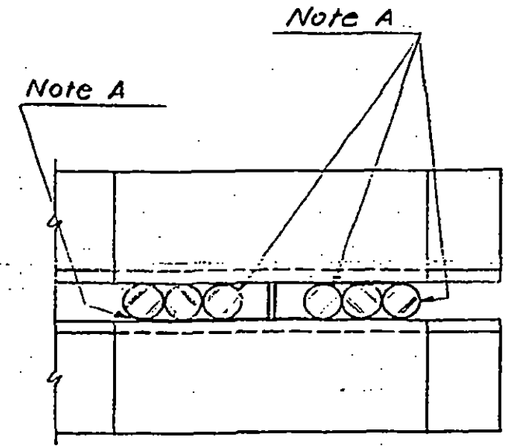

Section c-c

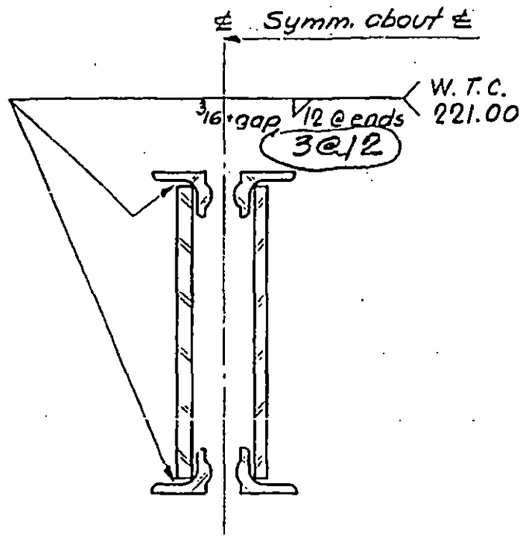

Section d-d

See Note B

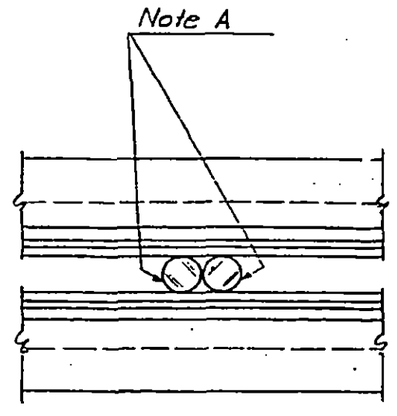

Section e-e

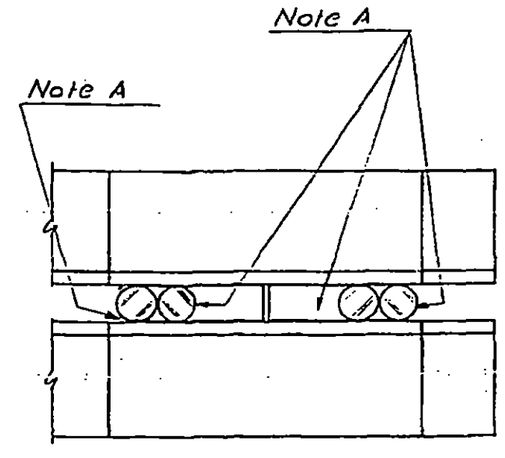

Section f-f

LICENSED PROFESSIONAL ENGINEER
LESLIE E. ROBERTSON
No. 34360
UNIVERSITY OF THE STATE OF NEW YORK

DESIGNED
DRAWN
REVIEWED

7-AB4-60

SKILLING, HELLE, CHRISTIANSEN, ROBERTSON — Structural & Civil Engineers

PROJECT THE WORLD TRADE CENTER | TITLE DETAIL E 77A | DATE 8-15-68

REVISIONS

10-4-68

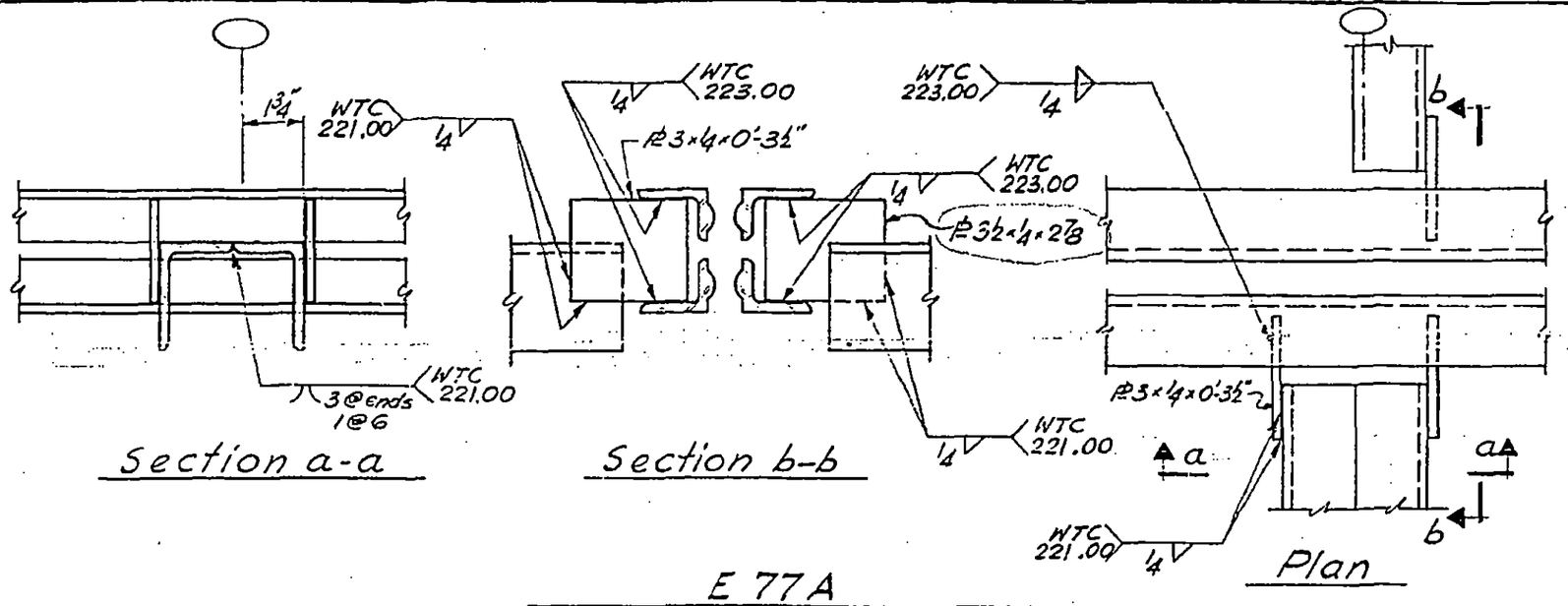

E 77A

LICENSED PROFESSIONAL ENGINEER
LESLIE E. ROBERTSON
No. 34360
UNIVERSITY OF THE STATE OF NEW YORK

DESIGNED

DRAWN

REVIEWED

7-AB4-61

SKILLING, HELLE, CHRISTIANSEN, ROBERTSON — Structural & Civil Engineers

PROJECT: THE WORLD TRADE CENTER | TITLE: FLOOR PANEL-DETAIL E78, E79 | DATE: 1-6-69

REVISIONS

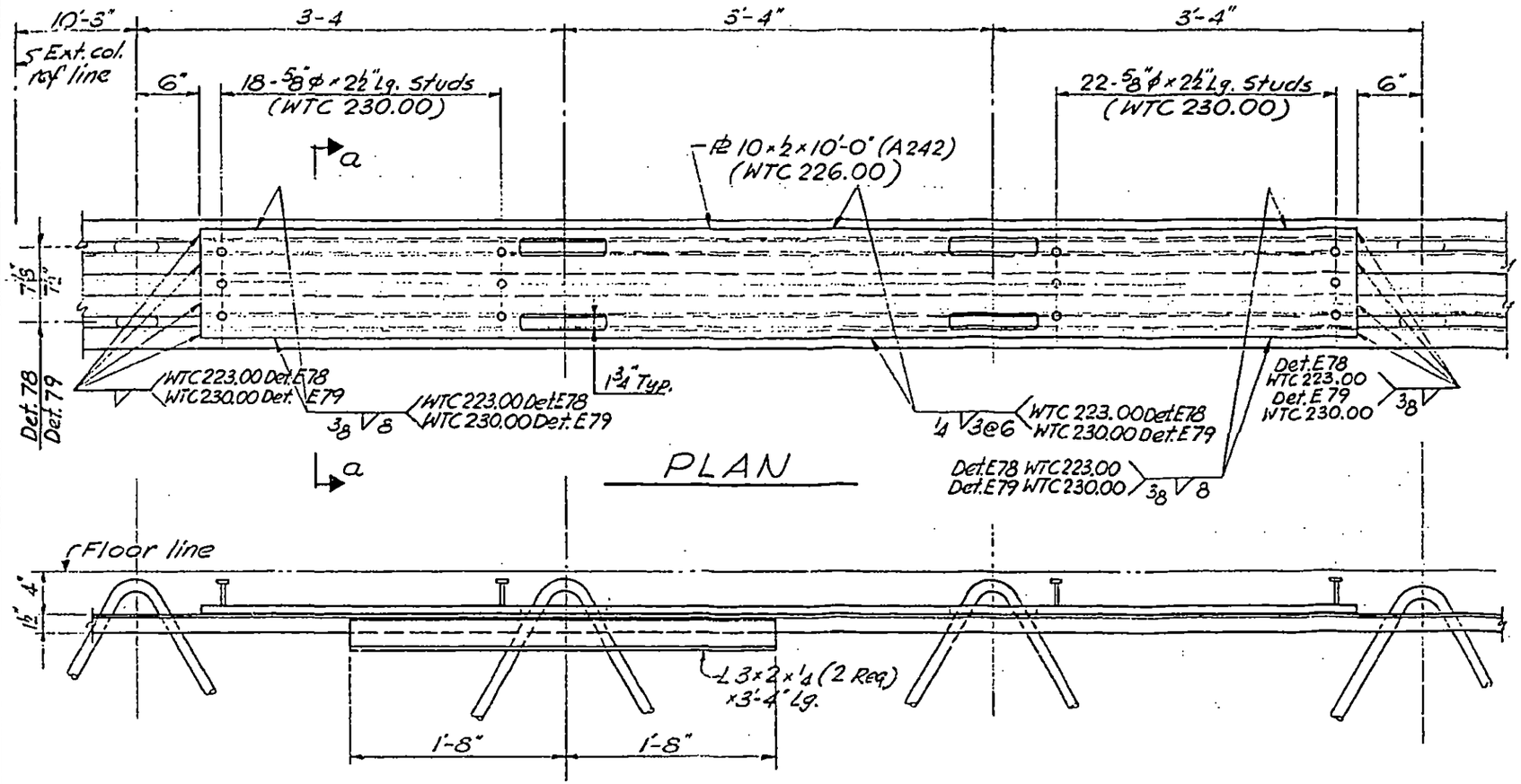

LICENSED PROFESSIONAL ENGINEER — LESLIE E. ROBERTSON — No. 34360 — UNIVERSITY OF THE STATE OF NEW YORK

DESIGNED

DRAWN

REVIEWED

58

7-AB4-62

NTCI-1054-LRCA,2